# D หมวดสกรู

## Screws

MATS MASTER TEST & SYSTEMS

# Eye Bolts
## อายโบลท์ (CHI)

| Code | CHI |
|---|---|
| Material | SS400 |

**Order** Code M
CHI 10

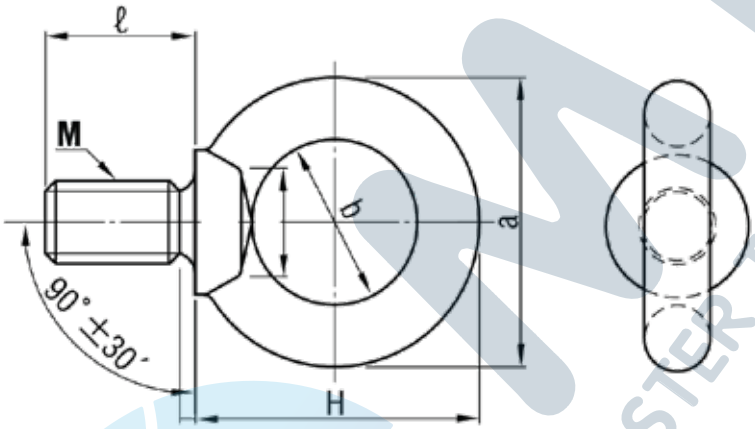


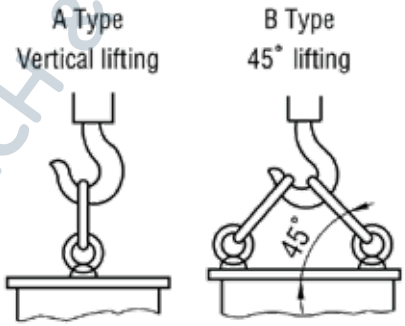


| Code | M | M x p | a | b | H | ℓ | A Type & B Type |
|---|---|---|---|---|---|---|---|
| CHI | 8 | 8 x 1.25 | 32.6 | 20 | 33.3 | 15 | 80 (Kg) |
| | 10 | 10 x 1.5 | 41 | 25 | 41.5 | 18 | 150 (Kg) |
| | 12 | 12 x 1.75 | 50 | 30 | 51 | 22 | 220 (Kg) |
| | 16 | 16 x 2.0 | 60 | 35 | 60 | 27 | 450 (Kg) |
| | 20 | 20 x 2.5 | 72 | 40 | 71 | 30 | 630 (Kg) |
| | 24 | 24 x 3.0 | 90 | 50 | 90 | 38 | 950 (Kg) |
| | 30 | 30 x 3.5 | 110 | 60 | 110 | 45 | 1500 (Kg) |
| | 36 | 36 x 4.0 | 133 | 70 | 132 | 55 | 2300 (Kg) |
| | 42 | 42 x 4.5 | 151 | 80 | 151 | 65 | 3400 (Kg) |
| | 48 | 48 x 5.0 | 170 | 90 | 170 | 70 | 4500 (Kg) |





MTS MASTER TECH & SYSTEMS
MasterTech @mts-th
www.mastertechandsystems.com
02-756-0000

# Hook (Plate Type)
## หูหิ้วแม่พิมพ์ (CHP)

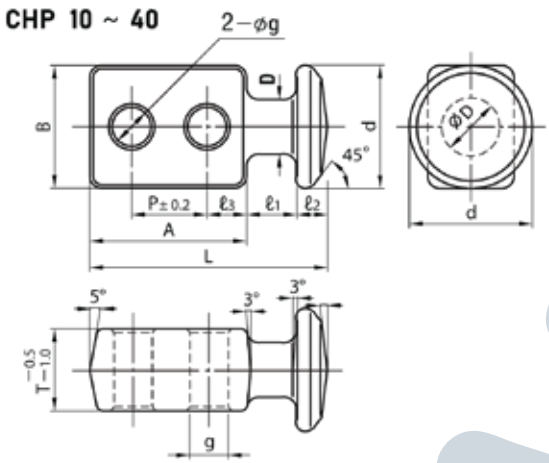


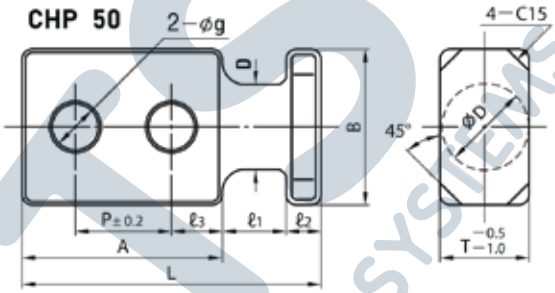


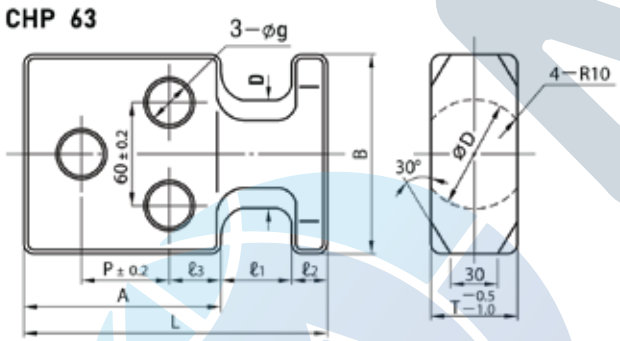


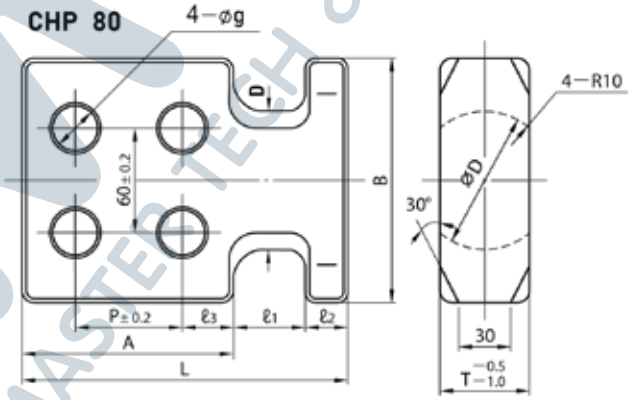


| Code | CHP |
|---|---|
| Material | SS400 |

**Order** Code D
CHP 25

| Code | D | d | B | T | L | A | ℓ1 | ℓ2 | ℓ3 | P | g | N/piece {kgf/piece} For steel, safety factor 10 |
|---|---|---|---|---|---|---|---|---|---|---|---|---|
| CHP | **10** | 28 | 28 | 18 | 50 | 32 | 10 | 8 | 8 | 16 | 7 | 1569 {160} |
| | **12** | 32 | 32 | 20 | 56 | 38 | 10 | 8 | 10 | 18 | 9 | 3530 {360} |
| | **16** | 36 | 36 | 24 | 67 | 46 | 13 | 8 | 12 | 22 | 11 | 4511 {460} |
| | **20** | 40 | 40 | 26 | 88 | 60 | 18 | 10 | 15 | 30 | 14 | 5492 {560} |
| | **25** | 48 | 48 | 35 | 92 | 60 | 20 | 12 | 15 | 30 | 14 | 6570 {670} |
| | **32** | 55 | 55 | 40 | 118 | 80 | 25 | 13 | 20 | 40 | 18 | 12160 {1240} |
| | **40** | 70 | 70 | 50 | 138 | 93 | 30 | 15 | 24 | 45 | 22 | 19123 {1950} |
| | **50** | - | 90 | 50 | 170 | 115 | 35 | 20 | 30 | 55 | 26 | 27459 {2800} |
| | **63** | - | 115 | 50 | 175 | 115 | 40 | 20 | 30 | 55 | 26 | 39227 {4000} |
| | **80** | - | 140 | 50 | 185 | 120 | 40 | 25 | 30 | 60 | 26 | 50995 {5200} |

# Stripper Bolts
## สตริปเปอร์โบลท์ (MSB)

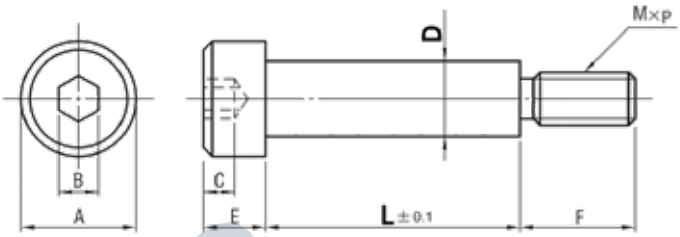


| Code | MSB |
|---|---|
| Material | SCM435 |

**Order** Code D x L
MSB 16 x 100

| Code | D | L |
|---|---|---|
| MSB | 4.5 | 10 15 20 25 30 35 40 45 50 |
| | 5.5 | 10 15 20 25 30 35 40 45 50 |
| | 6.5 | 10 15 20 25 30 35 40 45 50 55 60 65 70 75 80 |
| | 8 | 10 15 20 25 30 35 40 45 50 55 60 65 70 75 80 85 90 100 110 |
| | 10 | 10 15 20 25 30 35 40 45 50 55 60 65 70 75 80 85 90 95 100 110 120 |
| | 12 | 10 15 20 25 30 35 40 45 50 55 60 65 70 75 80 85 90 95 100 |
| | 13 | 10 15 20 25 30 35 40 45 50 55 60 65 70 75 80 85 90 95 100 110 120 130 140 |
| | 16 | 15 20 25 30 35 40 45 50 55 60 65 70 75 80 85 90 95 100 110 120 130 140 150 |
| | 20 | 40 45 50 55 60 65 70 75 80 85 90 95 100 110 120 130 140 150 |

| De9 | | A | B | C | E | F | M x p |
|---|---|---|---|---|---|---|---|
| 4.5 | -0.020 | 7 | 2.5 | 1.6 | 3 | 6 | 3 x 0.5 |
| 5.5 | -0.050 | 9 | 3 | 2.2 | 4 | 7 | 4 x 0.7 |
| 6.5 | -0.025 -0.061 | 10 | 4 | 2.5 | 5 | 9 | 5 x 0.8 |
| 8 | | 13 | 5 | 3 | 6 | 9 | 6 x 1.0 |
| 10 | | 16 | 6 | 4 | 8 | 12 | 8 x 1.25 |
| 12 | -0.032 -0.075 | 17 | | | | | |
| 13 | | 18 | 8 | 5 | 10 | 16 | 10 x 1.5 |
| 16 | | 24 | 10 | 7 | 14 | 18 | 12 x 1.75 |
| 20 | -0.040 -0.092 | 27 | 14 | 9 | 18 | 24 | 16 x 2.0 |

# Stripper Bolts สตริปเปอร์โบลท์ (MSBL)

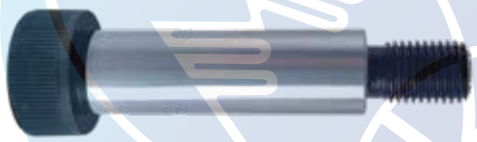

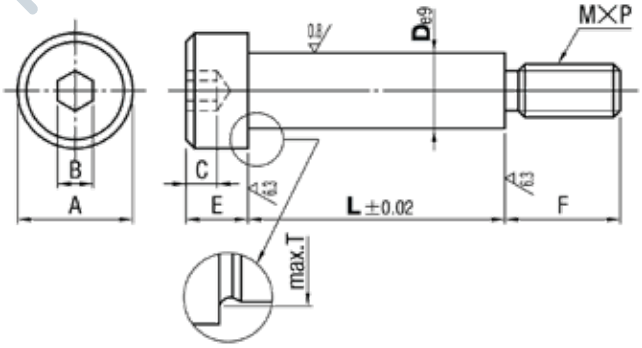


| Code | MSBL |
|---|---|
| Material | SCM435 |

**Order** Code D x L
MSBL 25 x 114

| Code | D | L |
|---|---|---|
| MSBL | 6.5 | 10 - 70 |
| | 8 | 10 - 90 |
| | 10 | 10 - 120 |
| | 13 | 10 - 130 |
| | 16 | 15 - 150 |
| | 20 | 15 - 150 |
| | 25 | 30 - 160 |

| De9 | | A | B | C | E | F | M × P | T |
|---|---|---|---|---|---|---|---|---|
| 6.5 | -0.025 -0.061 | 10 | 4 | 2.5 | 5 | 9 | 5 × 0.8 | 7 |
| 8 | | 13 | 5 | 3 | 6 | 9 | 6 × 1.0 | 8.7 |
| 10 | | 16 | 6 | 4 | 8 | 12 | 8 × 1.25 | 10.8 |
| 13 | -0.032 -0.075 | 18 | 8 | 5 | 10 | 16 | 10 × 1.5 | 14 |
| 16 | | 24 | 10 | 7 | 14 | 18 | 12 × 1.75 | 17 |
| 20 | -0.040 | 27 | 14 | 9 | 18 | 24 | 16 × 2.0 | 21 |
| 25 | -0.092 | 33 | 17 | 11 | 19 | 30 | 20 × 2.5 | 26 |





MTS MASTER TECH & SYSTEMS
MasterTech @mts-th
www.mastertechandsystems.com
02-756-0000

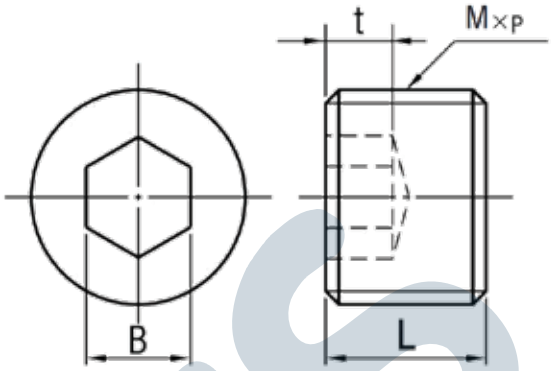


| Code | MSW |
|---|---|
| Material | SCM435 |

**Order** Code M
MSW 16

| Code | M | M x p | | L | t | B |
|---|---|---|---|---|---|---|
| MSW | **2.5** | 2.5 | 0.45 | 3 | 1.2 | 1.3 |
| | **3** | 3 | 0.5 | 3 | | 1.5 |
| | **4** | 4 | 0.7 | 4 | 1.5 | 2 |
| | **5** | 5 | 0.8 | 5 | 2 | 2.5 |
| | **6** | 6 | 1.0 | 6 | 3.5 | 3 |
| | **8** | 8 | 1.25 | 8 | 5 | 4 |
| | **10** | 10 | 1.5 | 10 | 6 | 5 |
| | **12** | 12 | | | 5.5 | 6 |
| | **14** | 14 | | | | |
| | **16** | 16 | | | | 8 |
| | **18** | 18 | | | | 10 |
| | **20** | 20 | | 12 | 6 | |
| | **22** | 22 | | | | 12 |
| | **24** | 24 | | | | 14 |
| | **25** | 25 | | | | |
| | **26** | 26 | | | | |
| | **27** | 27 | | | | |
| | **28** | 28 | | | | |
| | **30** | 30 | | | | 17 |
| | **33** | 33 | | | | |
| | **36** | 36 | | 18 | 10 | |
| | **38** | 38 | | | | |
| | **40** | 40 | | | | |
| | **42** | 42 | | | | |
| | **45** | 45 | | | | |

# Tapered Screw Plugs
## ปลั๊กสกรูเทเปอร์ (MSWT)

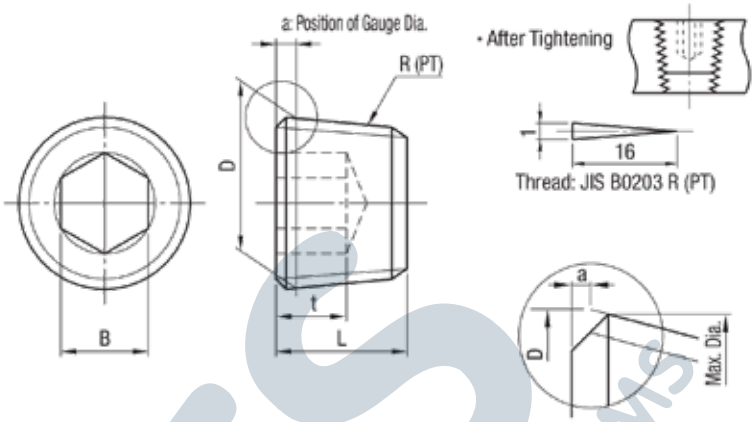


| Code | MSWT |
|---|---|
| Material | SCM435 |
| Surface | Black Oxide |

**Order** Code D
MSWT 16

| Code | No. | D | a | L | B | t | R (PT) |
|---|---|---|---|---|---|---|---|
| MSWT | J | 7.723 | 0.45 | 6 | 4 | 3.0 | 1/16 |
| | 1 | 9.728 | 0.45 (1.5) | 7 (8) | 5 | 3.5 (5) | 1/8 |
| | 2 | 13.157 | 0.7 (1.8) | 8.9 (11) | 6 | 4.5 (7.6) | 1/4 |
| | 3 | 16.662 | 0.7 (2.0) | 10 (12) | 8 | 5 (8) | 3/8 |
| | 4 | 20.955 | 0.9 | 12 | 10 | 6 | 1/2 |
| | 6 | 26.441 | | 14 | 14 | 7 | 3/4 |
| | 8 | 33.249 | 1.1 | 16.5 | 17 | 9 | 1 |

# Flat Washer (FW) / Spring Washer (SW#1 / SW#2)
## แหวนอีแปะ / แหวนสปริงใน / แหวนสปริงนอก

แหวนอีแปะ

แหวนสปริงใน

แหวนสปริงนอก

| Code | Size | OD x T |
|---|---|---|
| FW | M3 | 8 x 0.8 |
| | M4 | 10 x 0.8 |
| | M5 | 12 x 0.8 |
| | M6 | 13 x 1.0 |
| | M8 | 18 x 1.2 |
| | M10 | 22 x 1.6 |
| | M12 | 24 x 1.6 |
| | M16 | 32 x 2.5 |

**Order** Code Size
FW M3

| Code | Size |
|---|---|
| SW#1 | M3 |
| | M4 |
| | M5 |
| | M6 |
| | M8 |
| | M10 |
| | M12 |
| | M16 |
| | M20 |

**Order** Code Size
SW#1 M3

| Code | Size |
|---|---|
| SW#2 | M3 |
| | M4 |
| | M5 |
| | M6 |
| | M8 |
| | M10 |
| | M12 |
| | M16 |
| | M20 |

**Order** Code Size
SW#2 M10





MTS MASTER TECH & SYSTEMS
MasterTech @mts-th
www.mastertechandsystems.com
02-756-0000

# Socket Head Cab Screws
## สกรูหัวจม (CB)

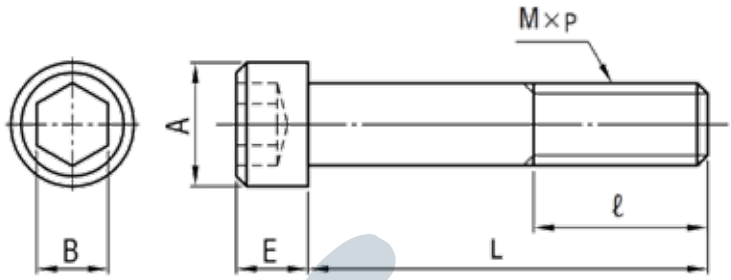


| | |
|---|---|
| Code | CB |
| Material | SCM435 |
| Hardness | 38 - 43 HRC ~ |

**Order** Code M x L
CB 25 x 100

| Code | M | M x p | L |
|---|---|---|---|
| CB | 3 | 3 x 0.5 | 6 8 10 12 16 20 25 30 35 40 45 50 |
| | 4 | 4 x 0.7 | 6 8 10 12 16 20 25 30 35 40 45 50 55 60 65 70 75 80 90 100 110 120 130 140 150 |
| | 5 | 5 x 0.8 | 6 8 10 12 16 20 25 30 35 40 45 50 55 60 65 70 75 80 90 100 110 120 130 140 150 |
| | 6 | 6 x 1.0 | 10 12 16 20 25 30 35 40 45 50 55 60 65 70 75 80 90 100 110 120 130 140 150 |
| | 8 | 8 x 1.25 | 10 12 16 20 25 30 35 40 45 50 55 60 65 70 75 80 90 100 110 120 130 140 150 |
| | 10 | 10 x 1.5 | 16 20 25 30 35 40 45 50 55 60 65 70 75 80 90 100 110 120 130 140 150 160 170 180 190 200 |
| | 12 | 12 x 1.75 | 16 20 25 30 35 40 45 50 55 60 65 70 75 80 90 100 110 120 130 140 150 160 170 180 190 200 210 220 230 240 250 |
| | 14 | 14 x 2.0 | 25 30 35 40 45 50 55 60 65 70 75 80 90 100 110 120 130 140 150 160 170 180 190 200 |
| | 16 | 16 x 2.0 | 25 30 35 40 45 50 55 60 65 70 75 80 90 100 110 120 130 140 150 160 170 180 190 200 210 220 230 240 250 300 |
| | 20 | 20 x 2.5 | 40 45 50 55 60 65 70 75 80 90 100 110 120 130 140 150 160 170 180 190 200 210 220 230 240 250 300 |
| | 22 | 22 x 2.5 | 40 45 50 55 60 65 70 75 80 90 100 110 120 130 140 150 160 170 180 190 200 210 220 230 240 250 300 |
| | 24 | 24 x 3.0 | 50 60 70 75 80 90 100 120 140 150 160 170 180 190 200 210 220 230 240 250 300 |
| | 30 | 30 x 3.5 | 50 60 70 80 90 100 120 140 150 160 170 180 190 200 230 250 300 |
| | 36 | 36 x 4.0 | 80 90 100 120 140 150 160 170 180 190 200 230 250 300 |

# Taper Socket Head Cab Screws สกรูหัวจมเตเปอร์ (FB)

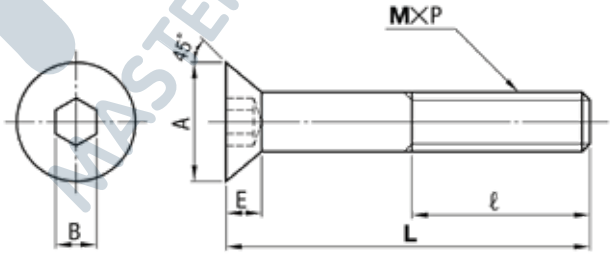


| | |
|---|---|
| Code | FB |
| Material | SCM435 |
| Hardness | 32 - 39 HRC |

**Order** Code M x L
FB 10 x 80

| Code | M | M × P | A min. | A max. | E | B |
|---|---|---|---|---|---|---|
| FB | 3 | M3 x 0.5 | 5.70 | 6.00 | 1.70 | 2.00 |
| | 4 | M4 x 0.7 | 7.60 | 8.00 | 2.30 | 2.50 |
| | 5 | M5 x 0.8 | 9.60 | 10.00 | 2.80 | 3.00 |
| | 6 | M6 x 1.0 | 11.60 | 12.00 | 3.30 | 4.00 |
| | 8 | M8 x 1.25 | 15.60 | 16.00 | 4.40 | 5.00 |
| | 10 | M10 x 1.5 | 19.50 | 20.00 | 5.50 | 6.00 |
| | 12 | M12 x 1.75 | 23.50 | 24.00 | 6.50 | 8.00 |
| | 14 | M14 x 2.0 | 26.50 | 27.00 | 7.00 | 10.00 |
| | 16 | M16 x 2.0 | 29.50 | 30.00 | 7.50 | 10.00 |
| | 20 | M20 x 2.5 | 35.40 | 36.00 | 8.50 | 12.00 |

| Code | M | L |
|---|---|---|
| FB | 3 | 6 8 10 12 15 20 25 30 |
| | 4 | 6 8 10 12 15 20 25 30 35 40 50 |
| | 5 | 10 12 15 20 25 30 35 40 50 |
| | 6 | 10 12 15 20 25 30 35 40 45 50 55 60 70 75 80 |
| | 8 | 15 20 25 30 35 40 45 50 55 60 65 70 75 80 90 100 |
| | 10 | 16 20 25 30 35 40 45 50 55 60 70 80 90 100 |
| | 12 | 20 25 30 35 40 45 50 55 60 70 80 90 100 110 120 130 140 150 |
| | 14 | 25 30 35 40 45 50 60 70 80 |
| | 16 | 30 35 40 45 50 55 60 65 70 75 80 90 100 110 120 130 140 150 |
| | 20 | 40 45 50 55 60 70 80 90 100 110 120 130 140 150 |

# Nuts
## หัวน็อตมิลดำ (NUT)

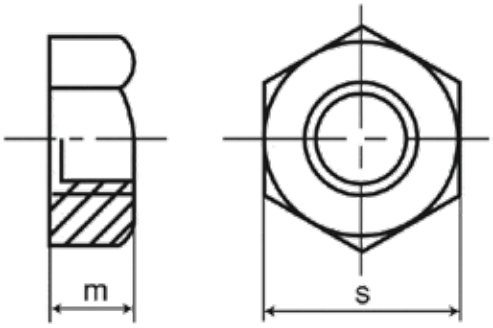


| Code | NUT |
|---|---|
| Material | SCM435 |

| Order | Code | Size |
|---|---|---|
| | NUT | M20 |

| Code | Size | P | m | s |
|---|---|---|---|---|
| NUT | M3 | 0.5 | 5.5 | 2.4 |
| | M4 | 0.7 | 7.0 | 3.2 |
| | M5 | 0.8 | 8.0 | 4.0 |
| | M6 | 1.0 | 10.0 | 5.0 |
| | M8 | 1.25 | 12.0 | 6.5 |
| | M10 | 1.5 | 17.0 | 8.0 |
| | M12 | 1.75 | 19.0 | 10.0 |
| | M14 | 2.0 | 22.0 | 11.0 |
| | M16 | 2.0 | 24.0 | 13.0 |
| | M18 | 2.5 | 27.0 | 15.0 |
| | M20 | 2.5 | 30.0 | 16.0 |
| | M22 | 2.5 | 32.0 | 18.0 |
| | M24 | 3.0 | 36.0 | 19.0 |
| | M27 | 3.0 | 41.0 | 22.0 |
| | M30 | 3.5 | 46.0 | 24.0 |
| | M33 | 3.5 | 50.0 | 26.0 |
| | M36 | 4.0 | 55.0 | 29.0 |
| | M42 | 4.5 | 65.0 | 34.0 |
| | M48 | 5.0 | 75.0 | 38.0 |
| | M48 | 3.0 | 75.0 | 38.0 |

# Set Screws ตัวหนอนมิล (MSWJ)

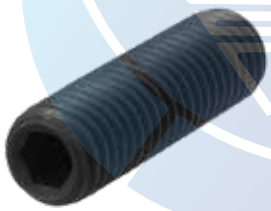

| Code | Size | 3 mm | 4 mm | 5 mm | 6 mm | 8 mm | 10 mm | 12 mm | 14 mm | 16 mm | 20 mm |
|---|---|---|---|---|---|---|---|---|---|---|---|
| MSWJ | P | 0.5 | 0.7 | 0.8 | 1.0 | 1.25 | 1.5 | 1.75 | 2.0 | 2.0 | 2.5 |
| | ปะแจ | 1.5 | 2.0 | 2.5 | 3.0 | 4.0 | 5.0 | 6.0 | 6.0 | 8.0 | 10.0 |
| | 3 mm | • | | | | | | | | | |
| | 4 mm | • | • | | | | | | | | |
| | 5 mm | • | • | • | • | | | | | | |
| | 6 mm | • | • | • | • | • | | | | | |
| | 8 mm | • | • | • | • | • | • | | | | |
| | 10 mm | • | • | • | • | • | • | • | | | |
| | 12 mm | • | • | • | • | • | • | • | | | |
| | 15 mm | • | • | • | • | • | • | • | • | • | |
| | 20 mm | • | • | • | • | • | • | • | • | • | • |
| | 25 mm | • | • | • | • | • | • | • | • | • | • |
| | 30 mm | | | • | • | • | • | • | • | • | • |
| | 35 mm | | | | • | • | • | • | • | • | • |
| | 40 mm | | | | • | • | • | • | • | • | • |
| | 45 mm | | | | • | • | • | • | | • | • |
| | 50 mm | | | | • | • | • | • | • | • | • |
| | 55 mm | | | | | • | • | • | | • | • |
| | 60 mm | | | | | • | • | • | | • | • |
| | 65 mm | | | | | • | • | • | | • | • |
| | 70 mm | | | | | | • | • | | • | • |
| | 75 mm | | | | | • | • | • | | • | • |
| | 80 mm | | | | | | | • | | • | • |
| | 90 mm | | | | | | | • | | • | • |
| | 100 mm | | | | | | | • | | • | • |
| | 110 mm | | | | | | | | | • | • |
| | 120 mm | | | | | | | | | • | • |

| Code | MSWJ |
|---|---|
| Material | SCM435 |

| Order | Code | Size |
|---|---|---|
| | MSWJ | 3 x 6 |





MTS MASTER TECH & SYSTEMS
MasterTech @mts-th
www.mastertechandsystems.com
02-756-0000

# Dowel Pins
## โดเวลพินแบบตัน (MS)

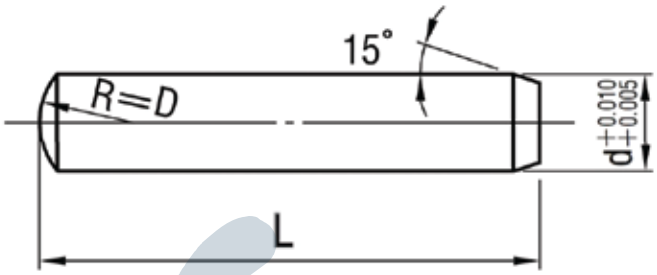


| Code | MS |
|---|---|
| Material | SUJ2 |
| Hardness | 58 HRC ~ |

**Order** Code D x L
MS 10 x 80

| Code | D | L | ℓ1 |
|---|---|---|---|
| MS | 3 | 10 15 20 25 30 40 | 1 |
| | 4 | 10 15 20 25 30 35 40 45 50 | 1.5 |
| | 5 | 10 15 20 25 30 35 40 45 50 | |
| | 6 | 10 15 20 25 30 35 40 45 50 55 60 | 2 |
| | 8 | 10 15 20 25 30 35 40 45 50 55 60 70 80 | 2.5 |
| | 10 | 15 20 25 30 35 40 45 50 55 60 70 80 | 3 |
| | 12 | 20 25 30 35 40 45 50 55 60 70 80 | 3.5 |

# Dowel Pins โดเวลพินแบบเกลียว (MSTH)

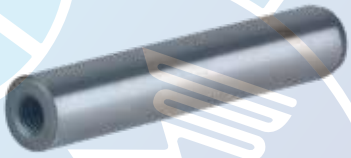

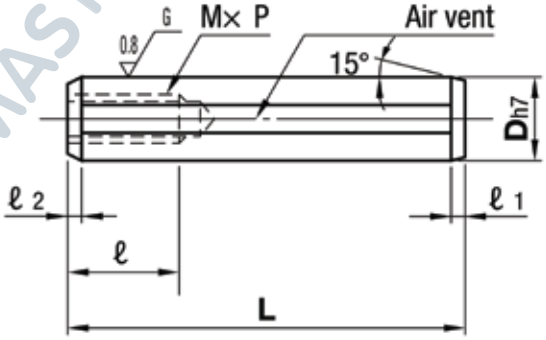


| Code | MSTH |
|---|---|
| Material | SUJ2 |
| Hardness | 58 HRC ~ |

**Order** Code D x L
MSTH 10 x 80

| Code | D | h7 | ℓ1 | ℓ2 | M x P | ℓ | L |
|---|---|---|---|---|---|---|---|
| MSTH | 5 | 0 -0.012 | 1.5 | 0.3 | 3 x 0.5 | 6 | 10 15 20 25 30 |
| | 6 | | 2 | | 4 x 0.7 | 8 | 15 20 25 30 35 40 45 50 |
| | 8 | 0 -0.015 | | 0.5 | 5 x 0.8 | | 15 20 25 30 35 40 45 50 55 60 70 80 |
| | 10 | | 2.5 | | 6 x 1.0 | 10 | 20 25 30 35 40 45 50 55 60 70 80 |
| | 12 | 0 -0.018 | | 1 | | | 20 25 30 35 40 45 50 55 60 70 80 |
| | 13 | | | | 8 x 1.25 | 15 | 40 50 60 70 80 |
| | 16 | | 3 | 1.5 | | | 40 50 60 70 80 |
| | 20 | 0 -0.021 | | | 10 x 1.5 | 18 | 50 60 70 80 |





MTS MASTER TECH & SYSTEMS
MasterTech @mts-th
www.mastertechandsystems.com
02-756-0000

# Ball Plugers
## ลูกดันสปริง (BPJ / BSJ)

| Code | BPJ / BSJ |
|---|---|
| Material | SCM435 / SUS304 |

| Order | Code | M | x | L |
|---|---|---|---|---|
| | BPJ | M4 | x | 80 |
| | BSJ | M4 | | |

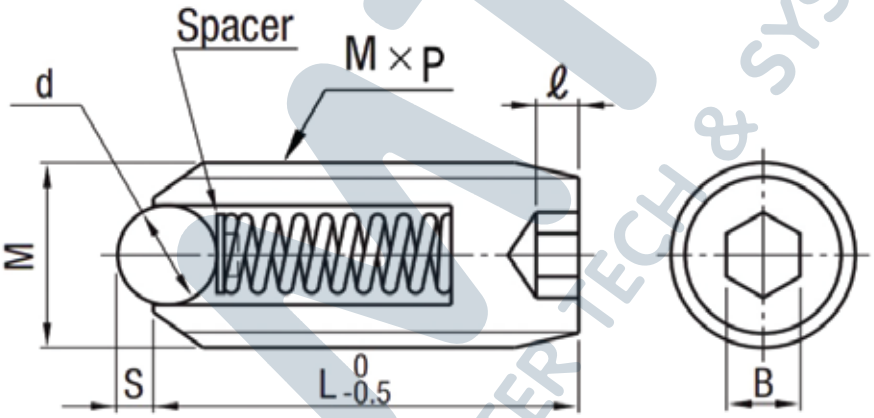


| Code | M | M x P | d | S | B | L |
|---|---|---|---|---|---|---|
| BPJ BSJ | M4 | 4 x 0.7 | 2.5 | 1 | 2 | 9 |
| | M5 | 5 x 0.8 | 3 | 1 | 2.5 | 12 |
| | M6 | 6 x 1.0 | 3.5 | 1.2 | 3 | 13 |
| | M8 | 8 x 1.25 | 5 | 1.8 | 4 | 15 |
| | M10 | 10 x 1.5 | 6 | 2 | 5 | 16 |
| | M12 | 12 x 1.75 | 8 | 3 | 6 | 20 |
| | M16 | 16 x 2.0 | 9.5 | 3 | 8 | 25 |





MTS MASTER TECH & SYSTEMS
MasterTech @mts-th
www.mastertechandsystems.com
02-756-0000