A | หมวดอะไหล่แม่พิมพ์พลาสติก

Standard Components for Plastic Mold

MTS
MASTER TECH & SYSTEMS

Guide Pins
สลักนำมีบ่า (GPA)

Code	GPA
Material	SCM415
Hardness	58 HRC ~

Order Code D x L
GPA 25 x 100

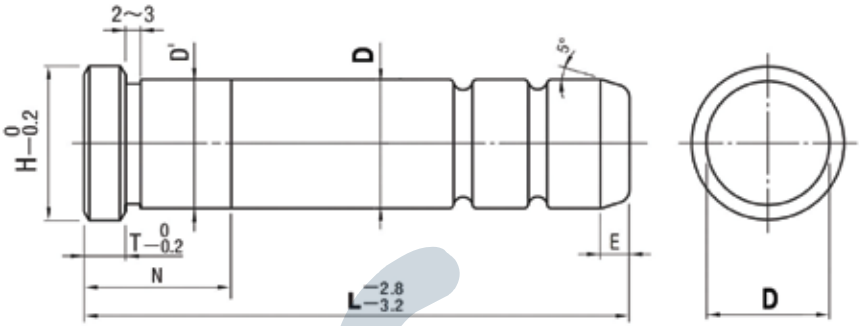

Code	D		D'		L	H	T	E
GPA	12	-0.005 -0.020	12	+0.020 +0.005	50 - 200	15	5	5
	16		16		50 - 300	20	6	
	18		18		50 - 300	23		
	20		20		50 - 350	25		
	25		25		50 - 350	30	8	
	30	-0.010 -0.030	30	+0.030 +0.010	50 - 350	35		
	35		35		55 - 400	40		
	40		40		130 - 450	45	10	

L	~ 50	55 - 95	100 - 130	135 - 160	165 - 220	225 ~
N	15	20	25	30	35	40

Guide Pins สลักนำมีบ่าสองตอน (GPB)

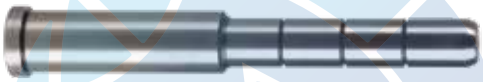

Code	GPB
Material	SUJ2
Hardness	58 HRC ~

Order Code d x L x N
GPB 25 x 100 x N30

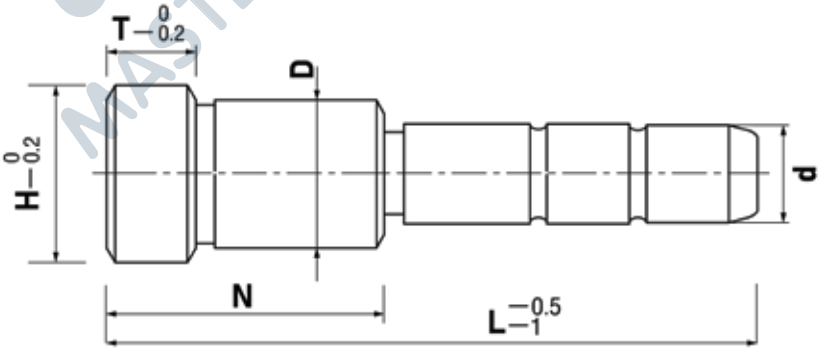

Code	d		D		H	T	L	N
GPB	16	-0.016 -0.027	25	+0.021 +0.008	30	6	กำหนดตามแบบลูกค้า	กำหนดตามแบบลูกค้า
	20	-0.020 -0.033	30		35	8		
	25		35	+0.025 +0.009	40			
	30		42		47	10		
	35	-0.025 -0.041	48		54			
	40		55	+0.030 +0.011	61	12		
	50		70		76	15		
	60	-0.030 -0.049	80		86			

หมายเหตุ ลูกค้าต้องกำหนดระยะ N ตามขนาดที่ต้องการ (ระยะ N ขึ้นอยู่กับความหนาของแผ่น Plate ที่นำสลักไปสวม)

MTS MASTER TECH & SYSTEMS
MasterTech @mts-th
www.mastertechandsystems.com
02-756-0000

Guide Pins
สลักนำมีบ่า (GPJL)

Code	GPJL
Material	SUJ2
Hardness	58 HRC ~

Order Code D x L x N
GPJL 25 x 100 x N20

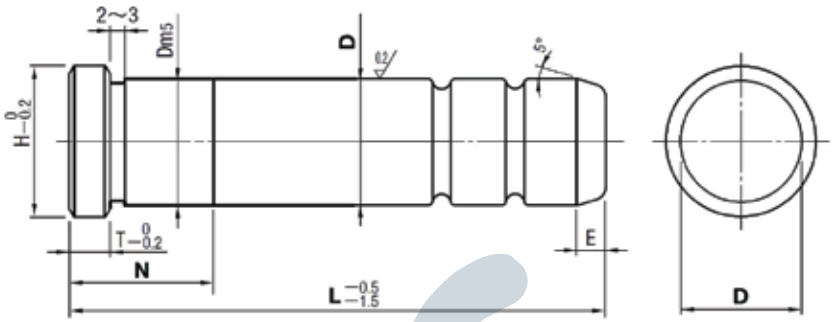

Code	D		Dm5		H	T	E	L	N
GPJL	8	-0.015 -0.020	8	+0.012 +0.006	11	5	3	40 - 80	กำหนดตามแบบลูกค้า
	10		10		13		4	40 - 80	
	12	-0.020 -0.025	12	+0.015 +0.007	17	6	5	40 - 200	
	13		13		18			40 - 200	
	16		16		21			40 - 250	
	20	-0.025 -0.030	20	+0.017 +0.008	25			50 - 300	
	25		25		30	8		50 - 350	
	30		30		35			60 - 400	
	35	-0.030 -0.040	35	+0.020 +0.009	40			70 - 450	
	40		40		45	10	8	100 - 500	
	50		50		56	12		120 - 550	
	60	-0.030 -0.050	60	+0.024 +0.011	65	15		200 - 550	

Guide Pins สลักนำ (GPOL)

Code	GPOL
Material	SUJ2
Hardness	58 HRC ~

Order Code D x L x N
GPOL 35 x 100 x N30

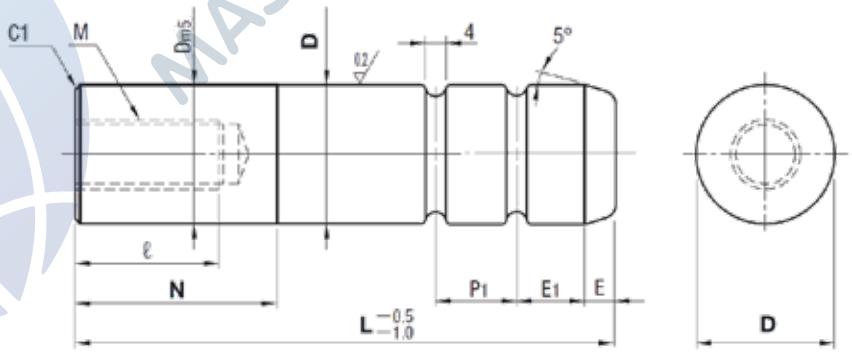

Code	D		Dm5		L	N	E	E1	P2	No. of groove	M x P	ℓ
GPOL	35	-0.030 -0.035	35	+0.020 +0.009	100	0 - 60	8	14	12	2	M16 x 2.0	32
					110 120 130			15	13			
					140 150 160	0 - 80						
					170 180 190 200			16	14			
	40	-0.030 -0.040	40		130 140	0 - 60		26	24			
					150 160 170 180 190	0 - 80		28	26			
					200 210 220			30	28			
	50		50		150	0 - 80		28	26			
					160 170			30	28			
					180 190	0 - 100						
					200 210 220 230 240			32	30			
					250 260			34	32			
	60	-0.030 -0.050	60	+0.024 +0.011	200 210 220 230 240	0 - 120		30	28		M20 x 2.5	40
					250 260 270 280			32	30			

Guide Pins
สลักนำ (GPSL)

Code	GPSL
Material	SUJ2
Hardness	58 HRC ~

Order Code D x L x N
GPSL 30 x 100 x N25

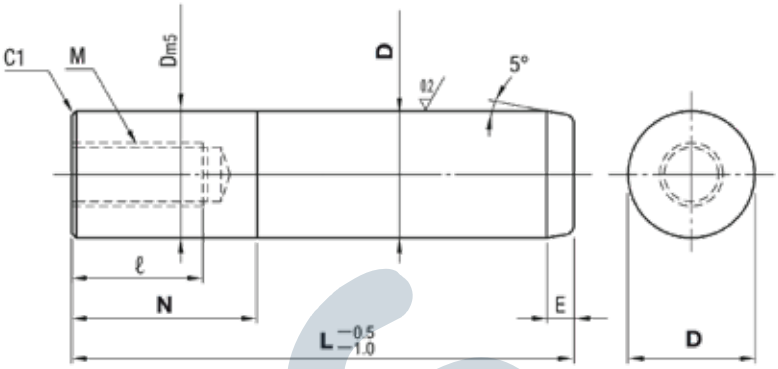

Code	D		Dm5		L	N	M x P	ℓ	E
GPSL	8	-0.015 -0.020	8	+0.012 +0.006	40 - 70	0 - 40	M5 x 0.8	10	3
	10		10		40 - 70				4
	12	-0.020 -0.025	12	+0.015 +0.007	40 - 160	0 - 100			5
	13		13		40 - 200		M6 x 1.0	12	
	16		16		40 - 200				
	20	-0.025 -0.030	20	+0.017 +0.008	40 - 220		M8 x 1.25	16	
	25		25		50 - 260		M12 x 1.75	24	
	30		30		70 - 260				
	35	-0.030 -0.035	35	+0.020 +0.009	100 - 300	0 - 120	M16 x 2.0	32	8
	40	-0.030 -0.040	40		100 - 300	0 - 140			
	50		50		100 - 400	0 - 200			
	60	-0.030 -0.050	60	+0.024 +0.011	150 - 500		M20 x 2.5	40	

Guide Pins สลักนำมีบ่า (GPHL)

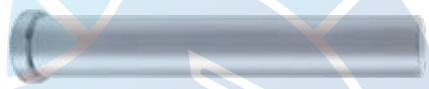

Code	GPHL
Material	SUJ2
Hardness	58 HRC ~

Order Code D x L x N
GPHL 30 x 100 x N25

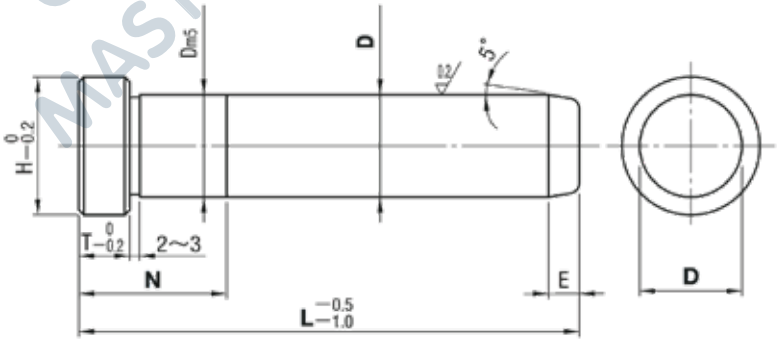

Code	D		Dm5		L	N	H	T	E
GPHL	8	-0.015 -0.020	8	+0.012 +0.006	30 - 80	10 - 60	11	5	3
	10		10		30 - 80		13		4
	12	-0.020 -0.025	12	+0.015 +0.007	30 - 200	10 - 80	17		5
	13		13		30 - 200		18		
	16		16		30 - 250	13 - 80	21	8	
	20	-0.025 -0.030	20	+0.017 +0.008	30 - 300	13 - 100	25		
	25		25		40 - 350	13 - 120	30		
	30		30		50 - 400	13 - 130	35		
	35	-0.030 -0.035	35	+0.020 +0.009	60 - 450	13 - 130	40		
	40	-0.030 -0.040	40		80 - 500	15 - 200	45	10	8
	50		50		100 - 550	17 - 200	55	12	
	60	-0.030 -0.050	60	+0.024 +0.011	200 - 550	20 - 200	65	15	

MTS MASTER TECH & SYSTEMS
MasterTech @mts-th
www.mastertechandsystems.com
02-756-0000

Guide Bushes
ปลอกนำมีบ่า BA (GBAM)

Order Code d x L
BA 25 x 100

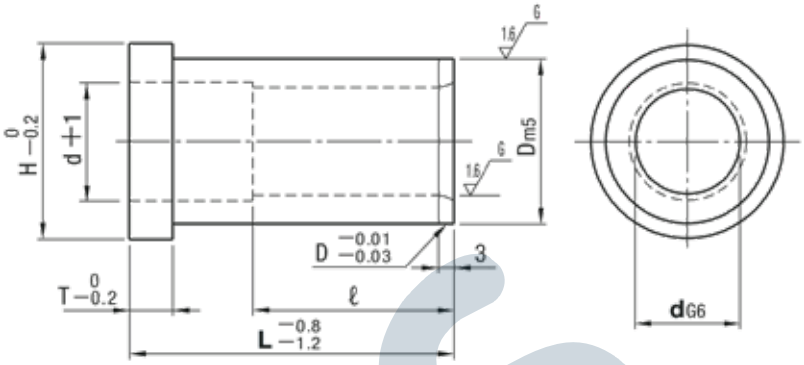

Code	BA / GBAM
Material	SUJ2
Hardness	58 HRC ~

Code	dG6		Dm5		H	T	ℓ																		
							L15	L20	L25	L30	L35	L40	L45	L50	L55	L60	L70	L80	L90	L100	L110	L120	L130	L140	L150
BA GBAM	8	+0.014 +0.005	12	+0.015 +0.007	14	5	15	15	15	-	-	-	-	-	-	-	-	-	-	-	-	-	-	-	-
	10		14		16		15	20	20	20	20	20													
	12	+0.017 +0.006	18		22		15	20	25	25	25	25	25												
	13		20	+0.017 +0.008	25		15	20	25	25	25	25	25												
	16		25		30	6	15	20	25	30	35	30	30	30	30										
	18		28		33	8	15	20	25	30	35	35	35	35	35	35									
	20	+0.020 +0.007	30		35		15	20	25	30	35	40	40	40	40	40	40	40	40	40					
	25		35	+0.020 +0.009	40		-	20	25	30	35	40	45	50	50	50	50	50	50	50	50	50			
	30		42		47	10		20	25	30	35	40	45	50	55	60	60	60	60	60	60	60	60	60	60
	35	+0.025 +0.009	48		54				25	30	35	40	45	50	55	60	70	70	70	70	70	70	70	70	70
	40		55	+0.024 +0.011	61				25	30	35	40	45	50	55	60	70	80	80	80	80	80	80	80	80
	50		70		76	12						40	45	50	55	60	70	80	90	100	100	100	100	100	100
	60	+0.029 +0.010	80		86				-	-	-	-	-	-	-	60	70	80	90	100	110	120	120	120	120

Guide Bushes ปลอกนำไม่มีบ่า BB (GBBM)

Order Code d x L
BB 25 x 100

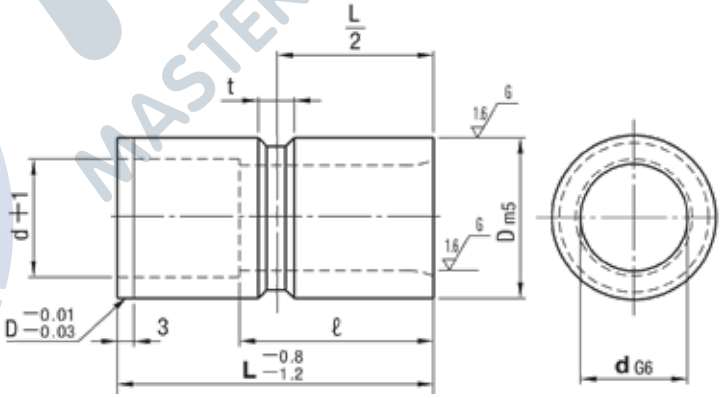

Code	BB / GBBM
Material	SUJ2
Hardness	58 HRC ~

Code	dG6		Dm5		t	ℓ															
						L15	L20	L25	L30	L35	L40	L45	L50	L55	L60	L70	L80	L90	L100	L110	L120
BB GBBM	8	+0.014 +0.005	12	+0.015 +0.007	4	15	15	15	-	-	-	-	-	-	-	-	-	-	-	-	-
	10		14			15	20	20	20	20	20										
	12	+0.017 +0.006	18			15	20	25	25	25	25										
	13		20	+0.017 +0.008	5	15	20	25	25	25	25	25	25								
	16		25			15	20	25	30	35	30	30	30	30							
	18		28		6	15	20	25	30	35	35	35	35	35	35						
	20	+0.020 +0.007	30			15	20	25	30	35	40	40	40	40	40	40	40	40	40		
	25		35	+0.020 +0.009		-	20	25	30	35	40	45	50	50	50	50	50	50	50		
	30		42		8		20	25	30	35	40	45	50	55	60	60	60	60	60	60	60
	35	+0.025 +0.009	48					25	30	35	40	45	50	55	60	70	70	70	70	70	70
	40		55	+0.024 +0.011	9			25	30	35	40	45	50	55	60	70	80	80	80	80	80
	50		70		11				30	35	40	45	50	55	60	70	80	90	100	100	100
	60	+0.029 +0.010	80					-	-	-	-	-	50	-	60	70	80	90	100	110	120

Guide Bushes
ปลอกนำมีบ่าแบบมีร่องน้ำมัน (GBHE)

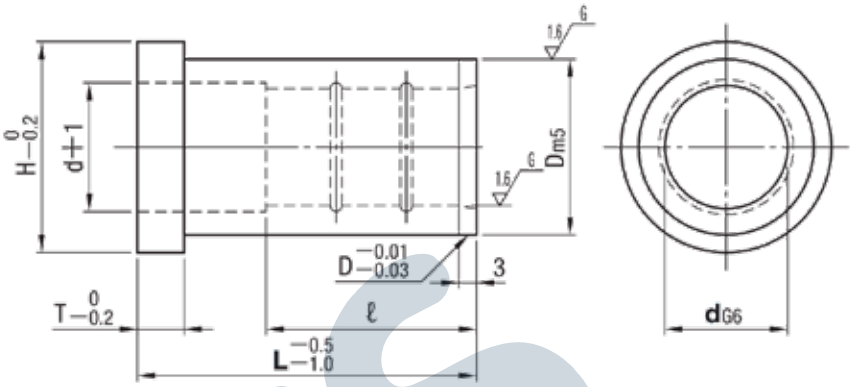

Code	GBHE
Material	SUJ2
Hardness	58 HRC ~

Order Code d x L
GBHE 25 x 100

Code	dG6		Dm5		H	T	ℓ																		
							L15	L20	L25	L30	L35	L40	L45	L50	L60	L70	L80	L90	L100	L110	L120	L130	L140	L150
GBHE	8	+0.014 +0.005	12	+0.015 +0.007	14	5	15	15	15	-	-	-	-	-	-	-	-	-	-	-	-	-	-	-
	10		14		16		15	20	20	20	20	20												
	12	+0.017 +0.006	18		22		15	20	25	25	25	25	25	25										
	13		20	+0.017 +0.008	25		15	20	25	25	25	25	25	25										
	16		25		30	6	15	20	25	30	35	30	30	30										
	20	+0.020 +0.007	30	+0.020 +0.009	35	8	-	20	25	30	35	40	40	40	40	40	40							
	25		35		40			20	25	30	35	40	45	50	50	50	50	50	50	50	50	50		
	30		42		47			-	25	30	35	40	45	50	60	60	60	60	60	60	60	60		
	35	+0.025 +0.009	48		54				-	30	35	40	45	50	60	70	70	70	70	70	70	70		
	40		55	+0.024 +0.011	60	10				30	35	40	45	50	60	70	80	80	80	80	80	80		
	50		70		75	12				-	-	40	45	50	60	70	80	90	100	100	100	100	100	100
	60	+0.029 +0.010	80		86					-	-	-	-	-	60	70	80	90	100	110	120	120	120	120

Guide Bushes ปลอกนำไม่มีบ่าแบบมีร่องน้ำมัน (GBSE)

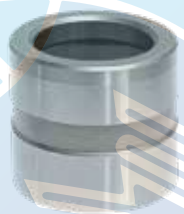

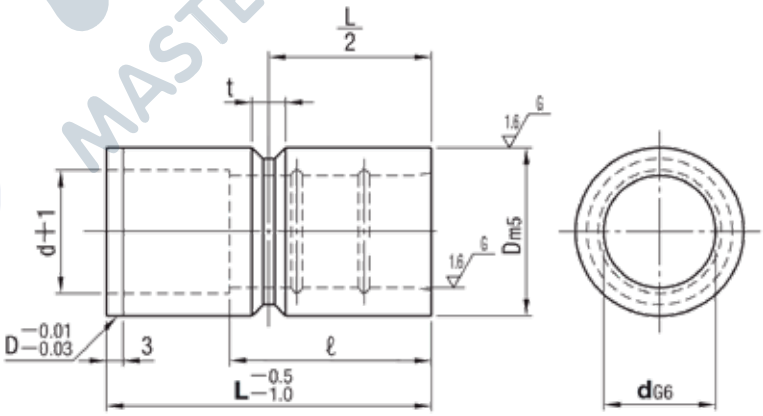

Code	GBSE
Material	SUJ2
Hardness	58 HRC ~

Order Code d x L
GBSE 25 x 100

Code	dG6		Dm5		T	ℓ														
						L15	L20	L25	L30	L35	L40	L45	L50	L60	L70	L80	L90	L100	L110	L120
GBSE	8	+0.014 +0.005	12	+0.015 +0.007	6	15	15	15	-	-	-	-	-	-	-	-	-	-	-	-
	10		14			15	20	20	20	20	20									
	12	+0.017 +0.006	18			15	20	25	25	25	25									
	13		20	+0.017 +0.008		15	20	25	25	25	25									
	16		25			15	20	25	30	35	30	30	30							
	20	+0.020 +0.007	30			15	20	25	30	35	40	40	40	40	40	40				
	25		35	+0.020 +0.009	8 (L=15 →t=6)	15	20	25	30	35	40	45	50	50	50	50	50	50		
	30		42			-	20	25	30	35	40	45	50	60	60	60	60	60		
	35	+0.025 +0.009	48				-	25	30	35	40	45	50	60	70	70	70	70		
	40		55	+0.024 +0.011				25	30	35	40	45	50	60	70	80	80	80	80	80
	50		70					-	30	35	40	45	50	60	70	80	90	100	100	100
	60	+0.029 +0.010	80						-	-	-	-	50	60	70	80	90	100	110	120

MTS MASTER TECH & SYSTEMS
MasterTech @mts-th
www.mastertechandsystems.com
02-756-0000

Oil Free Guide Bushes
ปลอกนำไม่ใช้น้ำมันมีบ่า (GBHDZ)

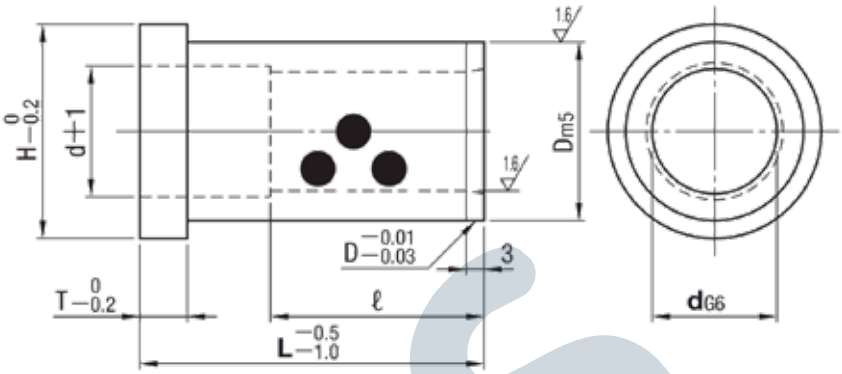

Code	GBHDZ
Material	Brass with graphite

Order Code d x L
GBHDZ 25 x 100

Code	dG6		Dm5		H	T	ℓ															
							L15	L20	L25	L30	L35	L40	L50	L60	L70	L80	L90	L100	L110	L120	L130	L150
GBHDZ	8	+0.014 +0.005	12	+0.015 +0.007	14	5	-	15	15	-	-	-	-	-	-	-	-	-	-	-	-	-
	10		14		16		15	20	20	20	20	20										
	12	+0.017 +0.006	18		22		15	20	25	-	-	-										
	13		20	+0.017 +0.008	25		15	20	25	25	25	25	25									
	16		25		30	6	15	20	25	30	35	30	30									
	20	+0.020 +0.007	30		35	8	-	20	25	30	35	40	40	40	40	40						
	25		35	+0.020 +0.009	40			20	25	30	35	40	50	50	50	50	50	50				
	30		42		47			-	25	30	35	40	50	60	60	60	60	60	60	60		
	35	+0.025 +0.009	48		54							40	50	60	70	70	70	70	70	70	70	
	40		55	+0.024 +0.011	60	10						40	50	60	70	80	-	80	-	80	80	
	50		70		75	12			-	-	-	-	-	60	70	80	-	100	-	100	100	100
	60	+0.029 +0.010	80		86									-	-	80	-	100	-	120	-	120

Oil Free Guide Bushes ปลอกนำไม่ใช้น้ำมันไม่มีบ่า (GBSDZ)

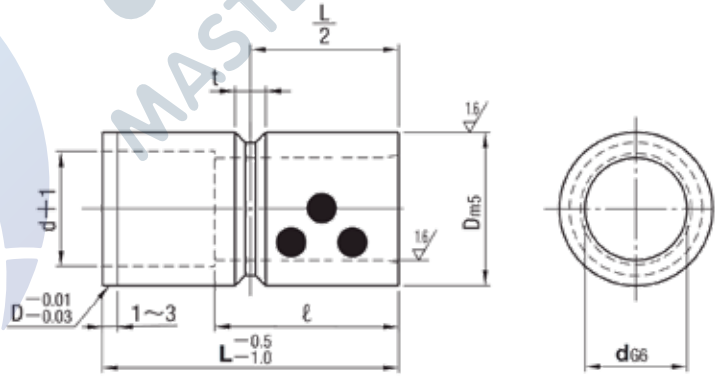

Code	GBSDZ
Material	Brass with graphite

Order Code d x L
GBSDZ 25 x 100

Code	dG6		Dm5		t												
						L15	L20	L25	L30	L35	L40	L50	L60	L70	L80	L100	L120
GBSDZ	8	+0.014 +0.005	12	+0.015 +0.007	6	15	-	-	-	-	-	-	-	-	-	-	-
	10		14			15	20										
	12	+0.017 +0.006	18			15	20	25									
	13		20	+0.017 +0.008		15	20	25	25								
	16		25			15	20	25	30	35							
	20	+0.020 +0.007	30			15	20	25	30	35	40	40					
	25		35	+0.020 +0.009	8 (L=15 →t=6)	15	20	25	30	35	40	50					
	30		42			-	20	25	30	35	40	50	60	60			
	35	+0.025 +0.009	48				-	25	30	35	40	50	60	70			
	40		55	+0.024 +0.011				-	30	-	40	50	60	70	80		
	50		70						-	-	40	50	60	70	80	100	
	60	+0.029 +0.010	80								-	50	60	-	80	100	120

Ejector Guide Bushes
ปลอกนำอีเจ็คเตอร์ (EGBH)

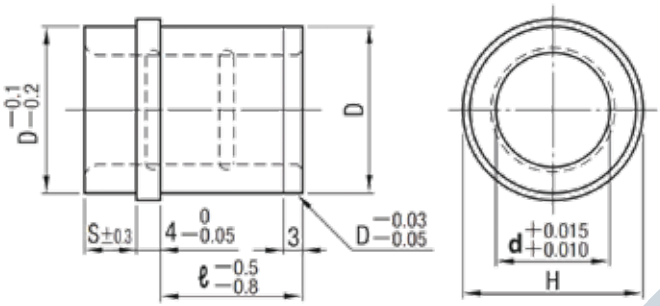

Code	EGBH
Material	SUJ2
Hardness	58 HRC ~

Order Code d x ℓ
EGBH 25 x 15

Code	d	S	H	Dh6		ℓ
EGBH	10	8	21	18	0 -0.011	10 13 15 20
	12	10	23	20	0 -0.013	10 13
	13	10	25	22		10 13 15 20 25
	16	10	28	25		10 13 15 20 25
	20	10	33	30		10 13 15 20 25 30
	25	10	38	35	0 -0.016	13 15 20 25 30
	30	15	43	40		13 15 20 25 30
	35	20	48	45		20 25 30
	40	20	55	52	0 -0.019	20 25 30
	50	20	65	62		25 30

Ejector Guide Bushes ปลอกนำอีเจ็คเตอร์ (EGB)

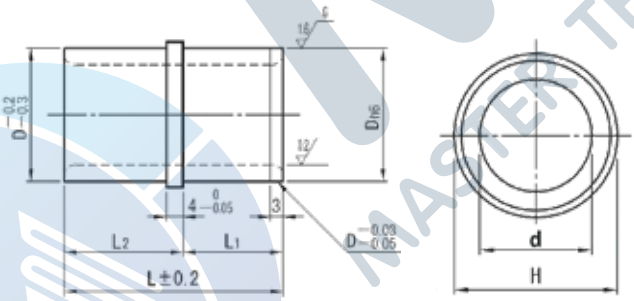

Code	EGB
Material	SUJ2
Hardness	58 HRC ~

Order Code d x L
EGB 30 x 42

Code	d		L	Dh6		H	L1	L2
EGB	10	+0.014 +0.005	23	16	0 -0.011	20	12	11
	12	+0.017 +0.006	25	18		22	12	13
			32				14	18
	16		25	25	0 -0.013	30	12	13
			32				14	18
			42				19	23
	20	+0.020 +0.007	25	30		35	12	13
			32				14	18
			42				19	23
			52				24	28
	25		25	35	0 -0.016	40	12	13
			32				14	18
			42				19	23
			52				24	28
	30		32	40		45	14	18
			42				19	23
			52				24	28
	40	+0.025 +0.009	42	50		55	19	23
			52				24	28
	50		52	60	0 -0.019	66	24	28

MTS MASTER TECH & SYSTEMS
MasterTech @mts-th
www.mastertechandsystems.com
02-756-0000

Ejector Guide Bushes
ปลอกนำอีเจ็คเตอร์ (EGBN)

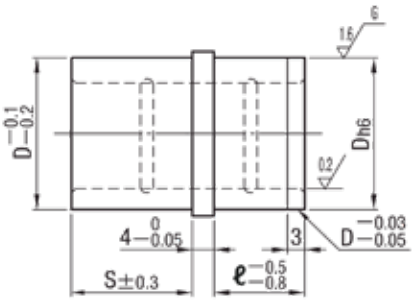

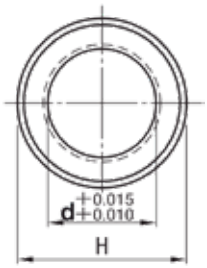

Code	EGBN
Material	SUJ2
Hardness	58 HRC ~

Order d x ℓ
25 x 20

Code	d	Dh6		H	S	ℓ
EGBN	13	22	0 -0.013	25	ℓ + 8	10 15 20
	16	25		28		10 15 20
	20	30		33		10 15 20 25
	25	35	0 -0.016	38		10 15 20 25
	30	40		43		20 25 30
	35	45		48		20 25 30
	40	52	0 -0.019	55		20 25 30
	50	62		65		20 25 30

Oil Free Ejector Guide Bushes
ปลอกนำอีเจ็คเตอร์ไม่ใช้น้ำมัน (EGBZ)

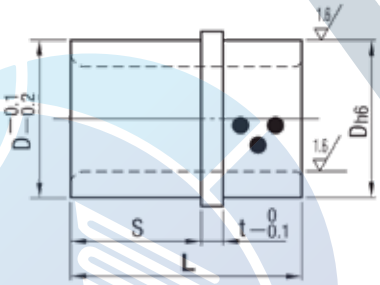

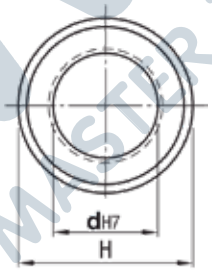

Code	EGBZ
Material	Brass with graphite

Order Code d x L
EGBZ 25 x 38

Code	dH7		Dh6		H	S	L	t
EGBZ	13	+0.018 0	22	0 -0.013	25	14	25	4
	16		25		28		25	
						19	33	
	20	+0.021 0	30		33	14	25	
						19	33	
							38	
						24	43	
	25		35	0 -0.016	38	14	25	
						19	33	
							38	
						24	43 53	
	30		40		43	19	33	
						24	38	
							43	
						29	53	
	35	+0.025 0	45		48	24	38	
							43	
						29	53	
						39	68	
	40		55	0 -0.019	61	24	43	8
						29	53	
						39	68	
	50		65		71	29	53	
						39	68	

MTS MASTER TECH & SYSTEMS

Ejector Guide Pins
อีเจ็คเตอร์ไกด์พิน (EGH)

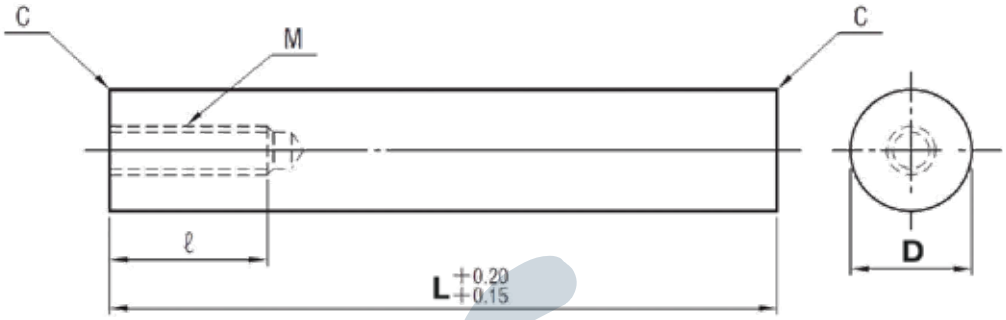

Code	EGH
Material	SUJ2
Hardness	58 HRC ~

Order Code D x L
EGH 25 x 100

Code	D		M x P	ℓ	L
EGH	12	-0.020 -0.025	M6 x 1.0	12	40 - 100
	13				40 - 150
	16				40 - 150
	20	-0.025 -0.030	M8 x 1.25	16	40 - 175
	25				50 - 250
	30		M10 x 1.5	20	50 - 300
	35				50 - 300
	40				50 - 350
	50				50 - 350

Ejector Guide Pins อีเจ็คเตอร์ไกด์พิน (EGHC)

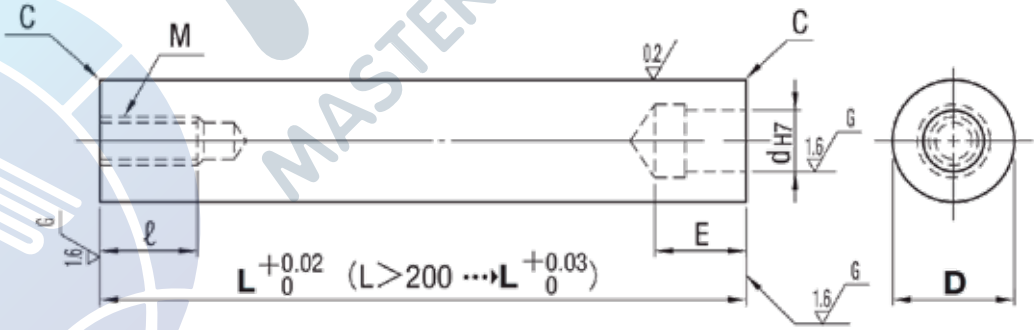

Code	EGHC
Material	SUJ2
Hardness	58 HRC ~

Order Code D x L
EGHC 25 x 100

Code	D		M x P	ℓ	dH7		E	Dowel pins	L
EGHC	12	-0.020 -0.025	M6 x 1.0	12	6	+0.012 0	15	MSTH 6-30	40 - 100
	13								40 - 150
	16								40 - 150
	20	-0.025 -0.030	M8 x 1.25	16	8	+0.015 0	20	MSTH 8-40	50 - 175
	25				10			MSTH 10-40	50 - 250
	30		M10 x 1.5	20	13	+0.018 0	25	MSTH 13-50	50 - 300
	35				16			MSTH 16-50	50 - 300
	40								50 - 350
	50								50 - 350

MTS MASTER TECH & SYSTEMS
MasterTech @mts-th
www.mastertechandsystems.com
02-756-0000

Ejector Guide Pins
อีเจ็คเตอร์ไกด์พิน (EGPP)

Code	EGPP
Material	SUJ2
Hardness	58 HRC ~

Order Code D x L
EGPP 25 x 100

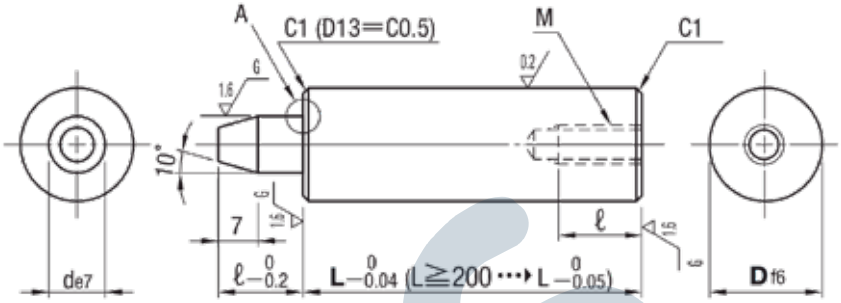

Code	Df6		de7		ℓ	L	M x P
EGPP	13	-0.016 -0.027	8	-0.025 -0.040	12	40 - 150	M6 x 1.0
	16		10		15	50 - 150	
	20	-0.020 -0.033				50 - 150	M8 x 1.25
	25					50 - 150	
	30		20	-0.040 -0.061	20	50 - 300	M10 x 1.5
	35	-0.025 -0.041				50 - 300	
	40					90 - 300	

Ejector Guide Pins อีเจ็คเตอร์ไกด์พิน (EGPD)

Code	EGPD
Material	SUJ2
Hardness	58 HRC ~

Order Code D x L
EGPD 25 x 100

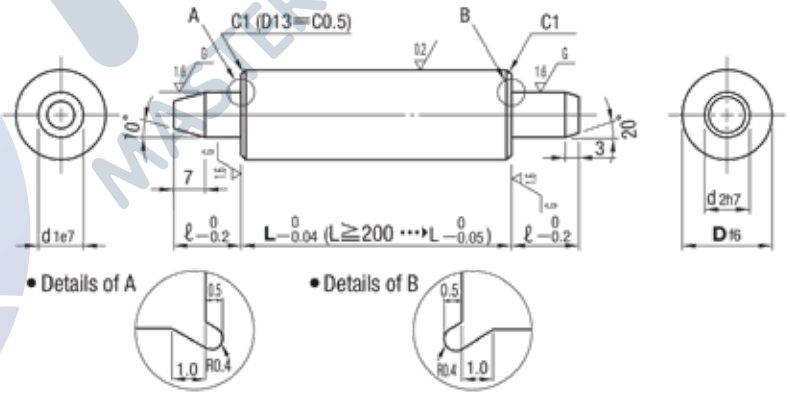

Code	Df6		d1e7		d2h7		ℓ	L
EGPD	13	-0.016 -0.027	8	-0.025 -0.040	8	0 -0.015	12	40 - 150
	16		10		10		15	50 - 150
	20	-0.020 -0.033						50 - 150
	25							50 - 150
	30		20	-0.040 -0.061	20	0 -0.021	20	50 - 300
	35	-0.025 -0.041						50 - 300
	40							90 - 300
	50							90 - 300

Bolts For Ejector Plate
สลักสำหรับชุดแผ่นเพลทเข็มกระทุ้ง (EPB)

Code	EPB
Material	SCM435
Hardness	30 - 35HRC
Surface	Black Oxide, head only

Order Code D x L
EPB 16 x 81

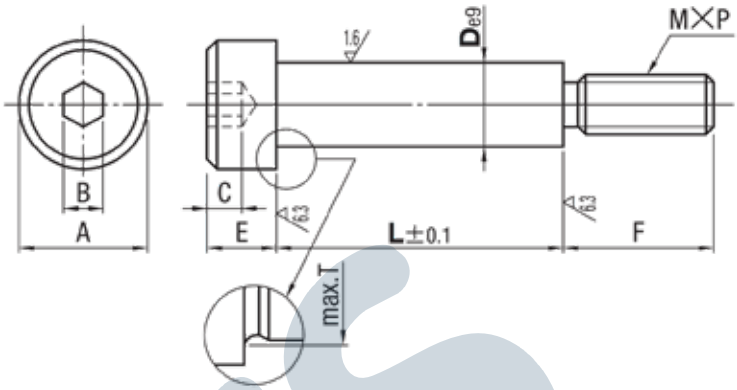

D		A	B	C	E	F	M x P	T
10	-0.025 -0.061	16	6	4	8	16	M8 x 1.25	10.8
13	-0.032	18	8	5	10	20	M10 x 1.5	14
16	-0.075	24	10	7	14	24	M12 x 1.75	17
20	-0.040	27	14	9	18	32	M16 x 2.0	21
25	-0.092	33	17	11	19	40	M20 x 2.5	26

Code	D	L
EPB	10	31 36 41 46 51 56 61
	13	31 36 41 46 51 56 61 66 71
	16	51 56 61 66 71 76 81 91 101 111 121 131
	20	61 66 71 76 81 91 101 111 121 131 141
	25	121 131 141 151 161

Support Pillars เสาซัพพอร์ท (SPL)

Code	SPL
Material	S45C
Surface	Black Oxide

Order Code D x L
SPL 25 x 100

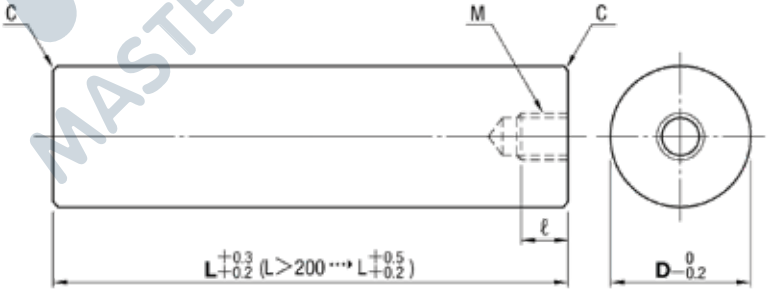

Code	D	L 5mm increments	L 10mm increments	C	M x P	ℓ
SPL	12	40 - 55	60 - 100	0.3	M6 x 1.0	12
	14	40 - 55	60 - 120			
	16	40 - 55	60 - 120			
	18	40 - 55	60 - 120			
	20	45 - 55	60 - 150	0.5		
	25	45 - 55	60 - 150		M8 x 1.25	16
	30	-	50 - 300			
	35		50 - 300			
	40		50 - 300			
	45		50 - 200			
	50		50 - 400			
	55		50 - 200	0.8	M12 x 1.75	24
	60		70 - 400			
	80		70 - 400			
	100		100 - 200	1.2	M16 x 2.0	32
	120		100 - 200			

MTS MASTER TECH & SYSTEMS
MasterTech @mts-th
www.mastertechandsystems.com
02-756-0000

Support Pins
ซัพพอร์ทพิน (SPP)

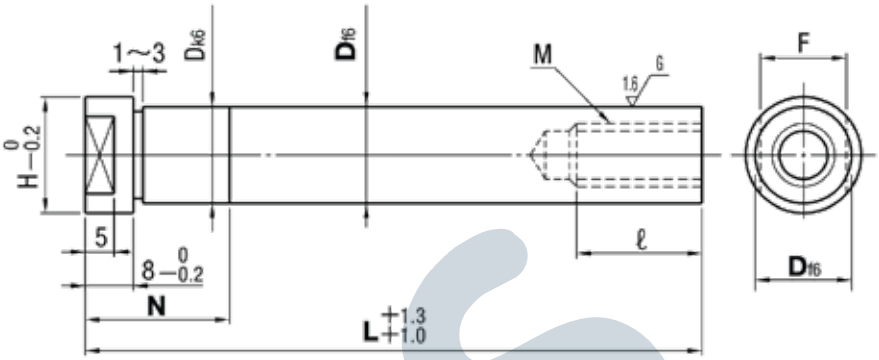

Code	SPP
Material	SUJ2
Hardness	58 HRC ~

Order Code D x L x N
SPP 25 x 200 x N30

Code	Df6		Dk6		F	H	M x P	ℓ	L	N
SPP	13	-0.016	13	+0.012	12	16	M6 x 1.0	12	60 - 120	8 - 60
	16	-0.027	16	+0.001	14	19	M10 x 1.5	20	80 - 210	
	20	-0.020	20	+0.015	19	23	M12 x 1.75	24	90 - 300	
	25	-0.033	25	+0.002	22	28	M16 x 2.0	32	100 - 300	
	30		30		29	35			150 - 350	
	35	-0.025	35	+0.018	32	40			150 - 350	
	40	-0.041	40	+0.002	36	45			150 - 350	

Support Pins ซัพพอร์ทพิน (SPP-OC)

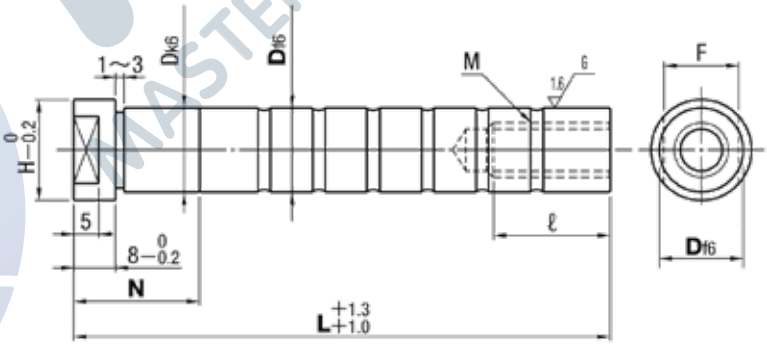

Code	SPP-OC
Material	SUJ2
Hardness	58 HRC ~

Order Code D x L x N
SPP-OC 25 x 200 x N40

Code	Df6		Dk6		F	H	M x P	ℓ	L	N
SPP-OC	13	-0.016	13	+0.012	12	16	M6 x 1.0	12	60 - 120	8 - 30
	16	-0.027	16	+0.001	14	19	M10 x 1.5	20	80 - 210	
	20	-0.020	20	+0.015	19	23	M12 x 1.75	24	90 - 300	
	25	-0.033	25	+0.002	22	28	M16 x 2.0	32	100 - 300	8 - 40
	30		30		29	35			150 - 350	8 - 50
	35	-0.025	35	+0.018	32	40			150 - 350	
	40	-0.041	40	+0.002	36	45			150 - 350	8 - 60

Stop Ring / Stop Pin
แหวนสต็อป (STR) / สต็อปพิน (STPN)

STR

STPN

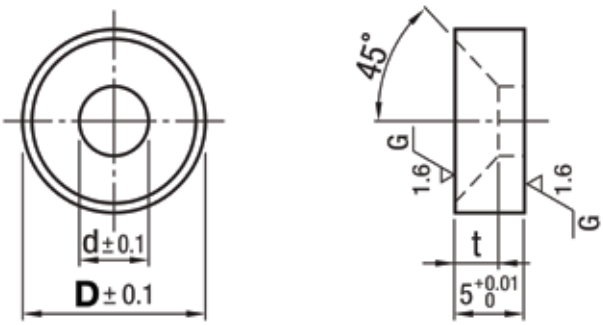

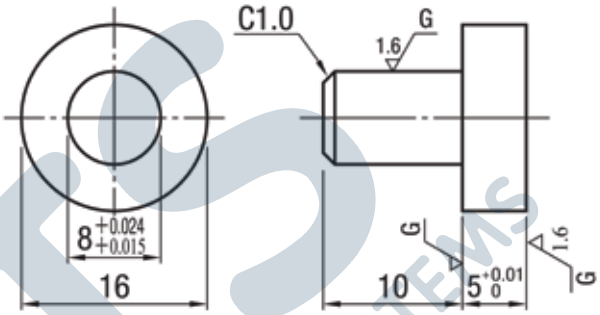

Code	D	d	t
STR	16	5.5	3
	20	6.5	3.5
	25	8.5	4.5

Code
STPN

Code	STR
Material	S45C

Order Code D
STR 25

Code	STPN
Material	S45C

Order Code
STPN

Return Pins เข็มกระทุ้งกลับ (RPH / RP8TH)

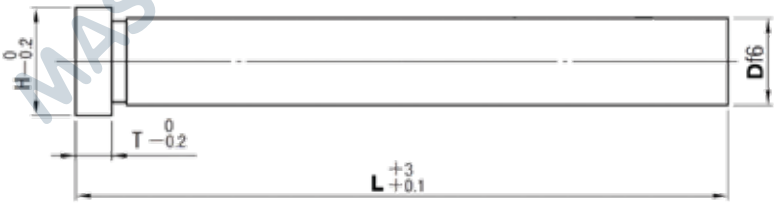

Code	Material	Hardness
RPH	S45C	58 HRC ~
RP8TH	SUJ2	58 HRC ~

Order Code D x L
RPH 25 x 200

Code	Df6		H	T	L
RPH RP8TH	12	-0.016 -0.027	17	8	60 80 100 150 200
	15		20		100 150 175 200 250 300 350 450
	16		21		100 150 175 200 250 300 350 450
	20	-0.020 -0.033	25		100 150 200 250 300 350 450 500
	25		30		100 150 200 250 300 350 450 500 550
	30		35		100 150 200 250 300 350 450 500 550
	35	-0.025 -0.041	40		150 200 250 300 350 450 500 550
	40		45		200 250 300 350 450 500 550
	50		55		200 250 300 350 450 500 550

MTS MASTER TECH & SYSTEMS
MasterTech @mts-th
www.mastertechandsystems.com
02-756-0000

Angular Pins
แองกูล่าพิน (AP)

Code	Dia	Material	Hardness
AP	8	SKD11	60 - 63 HRC
	10 - 50	SUJ2	58 HRC ~

Order Code D x L x N x A
AP 25 x 200 x N30 x A15

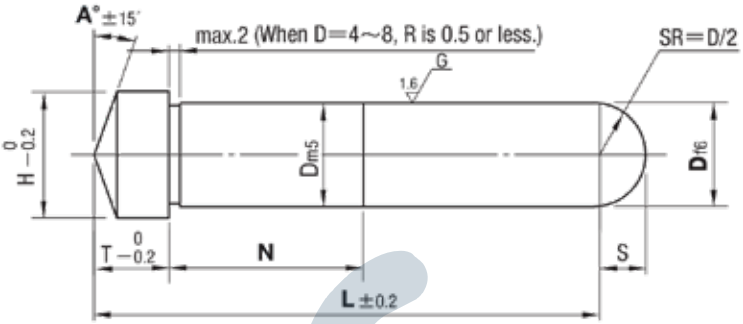

Code	D	m5	f6	T	H	S	L	N	A
AP	8	+0.012 +0.006	-0.013 -0.022	5	11	4	15 - 130	กำหนดตามแบบลูกค้า	0 - 30
	10			10	13	5	20 - 200		
	12	+0.015 +0.007	-0.016 -0.027		15	6	20 - 250		
	13				16	6.5	20 - 250		
	15			13	18	7.5	20 - 250		
	16				19	8	20 - 250		
	20	+0.017 +0.008	-0.020 -0.033		23	10	40 - 350		
	25				28		40 - 400		
	30			15	35		60 - 500		
	35	+0.020 +0.009	-0.025 -0.041		40		100 - 500		
	40				45		100 - 500		
	50			20	55		200 - 500		

Angular Pins แองกูล่าพิน (APU)

Code	APU
Material	SUJ2
Hardness	58 HRC ~

Order Code D x L x N
APU 25 x 200 x N50

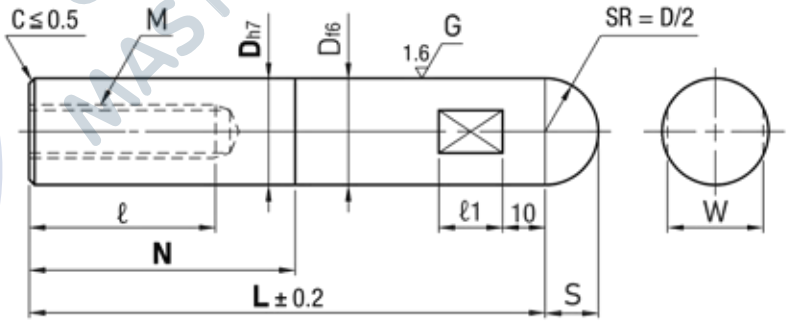

Code	D	h7	f6	M	ℓ	S	ℓ1	W	L	N
APU	10	0 -0.015	-0.013 -0.022	6	15	5	8	7	30 - 200	L > N ≧ 0
	12	0 -0.018	-0.016 -0.027			6	10	10	35 - 250	
	13			8	20	6.5		10	35 - 250	
	16			10	25	8		13	45 - 250	
	20	0 -0.021	-0.020 -0.033	12	30	10	12	17	50 - 350	
	25							22	50 - 400	
	30			16	40		18	27	60 - 400	
	32	0 -0.025	-0.025 -0.041					27	60 - 400	
	35							32	60 - 450	
	40			20	40	15	18	36	60 - 450	

Leader Pins For Rubber Mold
สลักนำแม่พิมพ์ยาง (GMT)

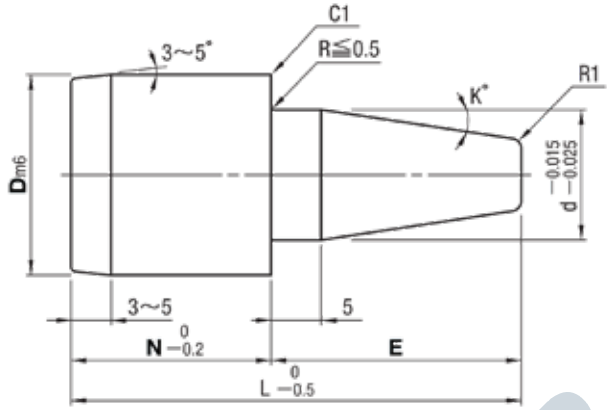

Code	GMT
Material	SUJ-2
Hardness	58 HRC ~

Order Code D x N x E
GMT 16 x 19 x 14

Code	Dm6		N	E	d	L	K°
GMT	16	+0.018 +0.007	14	14	10	28	10
			19	14		33	10
				19		38	6
	20	+0.021 +0.008	14	14	13	28	10
				19		33	10
				24		38	7
				29		43	6
				34		48	5
			19	14		33	10
				19		38	10
				24		43	7
				29		48	6
				34		53	5

Leader Pins For Rubber Mold สลักนำแม่พิมพ์ยาง (GMR)

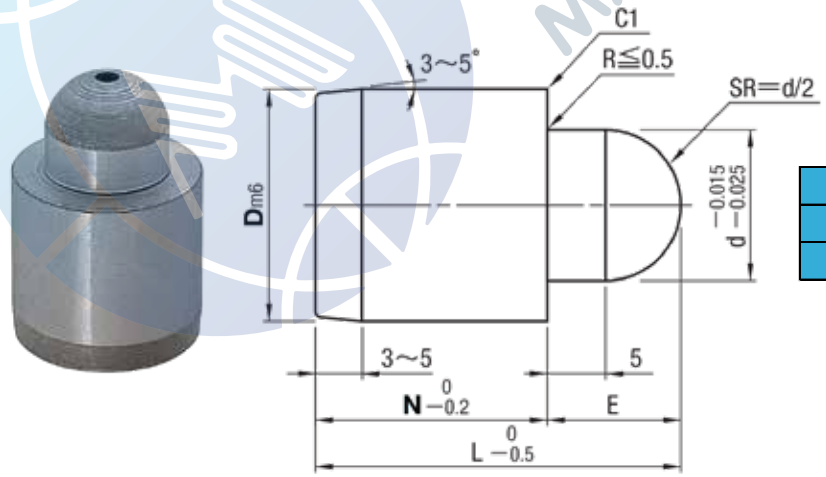

Code	GMR
Material	SUJ-2
Hardness	58 HRC ~

Order Code D x N
GMR 16 x 19

Code	Dm6		N	d	L	E
GMR	16	+0.018 +0.007	19	10	29	10
	20	+0.021 +0.008		13	30	11

MTS MASTER TECH & SYSTEMS
MasterTech @mts-th
www.mastertechandsystems.com
02-756-0000

Leader Bushes For Rubber Mold
ปลอกนำแม่พิมพ์ยาง (GMB)

Code	GMB
Material	SUJ-2
Hardness	58 HRC ~

Order Code D x L
GMB 16 x 19

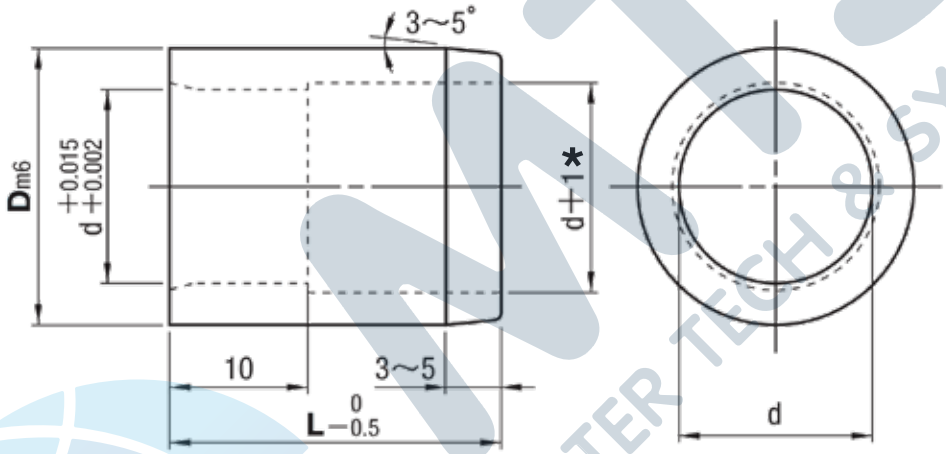

* There is no (d+1) relief machining in the case of L=9

Code	Dm6		L	d
GMB	16	+0.018 +0.007	9	10
			14	
			19	
	20	+0.021 +0.008	9	13
			14	
			19	
			24	
			29	

Ejector Pins
เข็มกระทุ้ง SKD61 (EPN / EPJ / EPS)

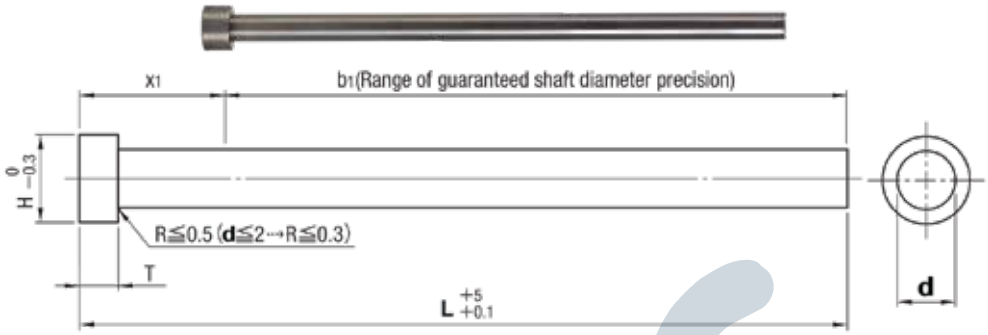

Code	Head Thickness	T d	T T
EPN	4 mm (T4)	-0.01 -0.02	0 -0.02
EPJ	6・8 mm (JIS)		0 -0.05
EPS	Special		0 -0.02

Code	EPN / EPJ / EPS
Material	SKD61
Hardness	40 - 45 HRC / 900 HV ~

Order Code d x L
EPN 2 x 100

Code		EPN 4mm Head H	EPN 4mm Head T	EPJ JIS Head H	EPJ JIS Head T	d	L
EPN	-	3	4	-	-	1	100 150 200 250
						1.1 1.2 1.3 1.4	100 150 200
						1.5	100 150 200 250
		4				1.6 1.7 1.8 1.9	100 150 200 250 300
						2	100 150 200 250 300 350 400
		5				2.1 2.2 2.3 2.4	100 150 200 250 300
						2.5	100 150 200 250 300 350 400
		6				2.6 2.7 2.8 2.9	100 150 200 250 300
						3	100 150 200 250 300 350 400 450 500
		7				3.1 3.2 3.3 3.4	100 150 200 250 300 350 400
						3.5	100 150 200 250 300 350 400 450 500
						3.6 3.7 3.8 3.9	100 150 200 250 300 350 400
	EPJ			8	6	4	100 150 200 250 300 350 400 450 500 550 600 650 700
		8				4.1 4.2 4.3 4.4	100 150 200 250 300 350 400
						4.5	100 150 200 250 300 350 400 450 500 550 600 650 700
				9		4.6 4.7 4.8 4.9	100 150 200 250 300 350 400
						5	100 150 200 250 300 350 400 450 500 550 600 650 700
		9				5.1 5.2 5.3 5.4	100 150 200 250 300 350 400
						5.5	100 150 200 250 300 350 400 450 500 550 600 650 700
				10		5.6 5.7 5.8 5.9	100 150 200 250 300 350 400
						6	100 150 200 250 300 350 400 450 500 550 600 650 700 750 800
		10		11		6.1 6.2 6.3 6.4	100 150 200 250 300 350 400
						6.5	100 150 200 250 300 350 400 450 500 550 600 650 700
						7	100 150 200 250 300 350 400 450 500 550 600 650 700 750 800
		11		13	8	8	100 150 200 250 300 350 400 450 500 550 600 650 700 750 800
		-		14		9	100 150 200 250 300 350 400 450 500 550 600
		15		15		10	100 150 200 250 300 350 400 450 500 550 600 650 700 750 800
		-		16		11	100 150 200 250 300 350 400 450 500 550 600
		17		17		12	100 150 200 250 300 350 400 450 500 550 600 650 700 750 800
		18		18		13	100 150 200 250 300 350 400 450 500 550 600 650 700 750 800
		-		-		14	100 150 200 250 300 350 400 450 500 550 600 650 700 750 800
		20		20		15	100 150 200 250 300 350 400 450 500 550 600 650 700 750 800
		21		21		16	100 150 200 250 300 350 400 450 500 550 600 650 700 750 800
-		-	-	25		20	150 200 250 300 350 400 450 500 550 600 650 700 750 800 900 1000
				30		25	200 250 300 350 400 450 500 550 600 650 700 750 800 900 1000

Code	EPS Special Head H		EPS Special Head T	d	L
EPS	4	6	4	1	100 150 200 250
				1.1 1.2 1.3 1.4	100 150 200
				1.5	100 150 200 250
	5	6		1.6 1.7 1.8 1.9	100 150 200 250 300
				2	100 150 200 250 300 350 400
	6			2.1 2.2 2.3 2.4	100 150 200 250 300
				2.5	100 150 200 250 300 350 400

MTS MASTER TECH & SYSTEMS
MasterTech @mts-th
www.mastertechandsystems.com
02-756-0000

Ejector Pins
เข็มกระทุ้ง SKH51 (EPH / EPHE-B / EPHS)

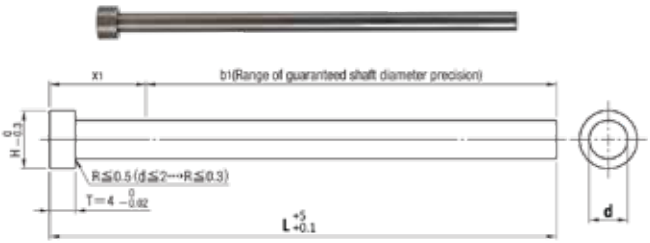

Code	Head thickness	T d
EPH	4mm (T4)	0 -0.005
EPHE-B		-0.01 -0.02
EPHS	Special	0 -0.005

Code	EPH / EPHE-B / EPHS
Material	SKH51
Hardness	58 - 60 HRC

Order Code d x L
EPHJ 4 x 200

Code	H	T	d	L
EPH EPHE-B	3	4	0.8 0.9	100 150
			1 1.1 1.2 1.3 1.4	100 150 200
			1.5	100 150 200 250
	4		1.6 1.7 1.8 1.9	100 150 200 250
			2	100 150 200 250 300
	5		2.1 2.2 2.3 2.4	100 150 200 250
			2.5	100 150 200 250 300
	6		2.6 2.7 2.8 2.9	100 150 200 250
			3	100 150 200 250 300 350
	7		3.1 3.2 3.3 3.4	100 150 200 250
			3.5	100 150 200 250 300 350
			3.6 3.7 3.8 3.9	100 150 200 250
			4	100 150 200 250 300 350

Code	H	T	d	L
EPHS	4	4	1	100 150 200
	6		2	100 150 200 250
			2.5	100 150 200 250

Ejector Pins เข็มกระทุ้ง SKH51 (EPHJ / EPHJE / EPHJS)

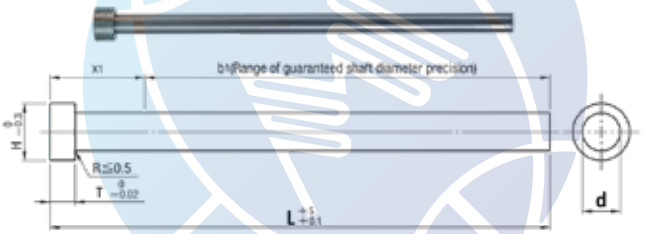

Code	Head thickness	T d
EPHJ	6・8mm (JIS)	0 -0.005
EPHJE		-0.01 -0.02

Code	EPHJ / EPHJE
Material	SKH51
Hardness	58 - 60 HRC

Order Code d x L
EPHJ 4 x 200

Code	H	T	d	L
EPHJ EPHJE	8	6	4	100 150 200 250 300
			4.5	100 150 200 250 300
	9		5	100 150 200 250 300 350
			5.5	100 150 200 250 300 350
	10		6	100 150 200 250 300 350
	11		6.5	100 150 200 250 300 350
			7	100 150 200 250 300 350
	13	8	8	100 150 200 250 300 350
	14		9	100 150 200 250 300 350
	15		10	100 150 200 250 300 350
	17		12	100 150 200 250 300 350

Ejector Pins
เข็มกระทุ้ง SCM (EPCM)

Code	EPCM
Material	SACM 645
Inside Hardness	HRC 30 ± 2
Outside Hardness	HV 900 - 1100

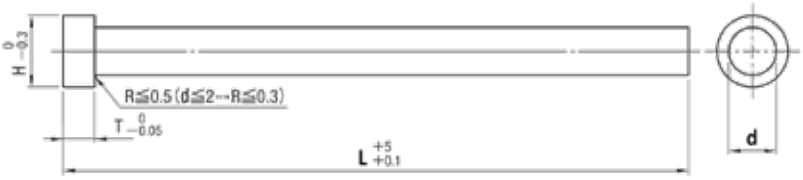

Order Code d x L
EPCM 1.5 x 150

Code	d	H	T	L
EPCM	1	3	4	100 150 200 250
	1.5	4		100 150 200 250
	2	5		100 150 200 250
	2.5	6		100 150 200 250
	3			100 150 200 250 300 350 400
	3.5	7		100 150 200 250 300 350 400
	4	8	6	100 150 200 250 300 350 400
	4.5			100 150 200 250 300 350 400
	5	9		100 150 200 250 300 350 400
	5.5			100 150 200 250 300 350 400
	6	10		100 150 200 250 300 350 400 500
	7	11		100 150 200 250 300 350 400 500
	8	13	8	100 150 200 250 300 350 400 500 600
	10	15		100 150 200 250 300 350 400 500 600
	12	17		100 150 200 250 300 350 400 500 600
	14	19		100 150 200 250 300 350 400 500 600
	15	20		100 150 200 250 300 350 400 500 600
	16	21		100 150 200 250 300 350 400 500 600

Ejector Pins เข็มกระทุ้ง (Z-EPH-L)

Code	Z-EPH-L
Material	SKH51
Hardness	58 - 60 HRC

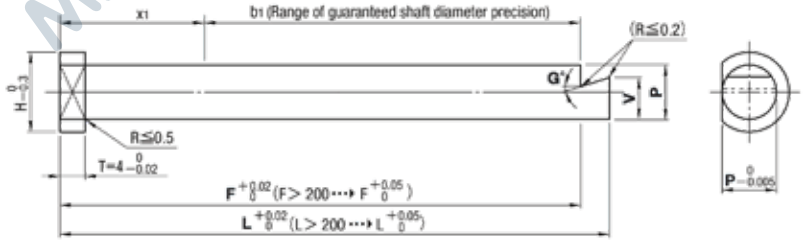

Order Code P x L x V x G x F
Z-EPH-L 5 x 200.00 x V2.0 x G5 x F195.00

Code	Head thickness	TP	TG	TV
Z-EPH-L	4mm (T4)	0 -0.005	± 30'	± 0.05

Code	H	T	P	L 0.01mm increments	V 0.5mm increments	G° 1° increments	F 0.01mm increments
Z-EPH-L	4	4	2	50.00 - 300.00	1.5 ≤ V < P	0 - 45	L - F ≤ 10
	5		2.5				
	6		3				
	7		4	50.00 - 350.00			
	8		5				
	9		6				
	10		7				
	11		8				

MTS MASTER TECH & SYSTEMS
MasterTech @mts-th
www.mastertechandsystems.com
02-756-0000

Step Ejector Pins
เข็มกระทุ้งสองตอน (ENS / EJS)

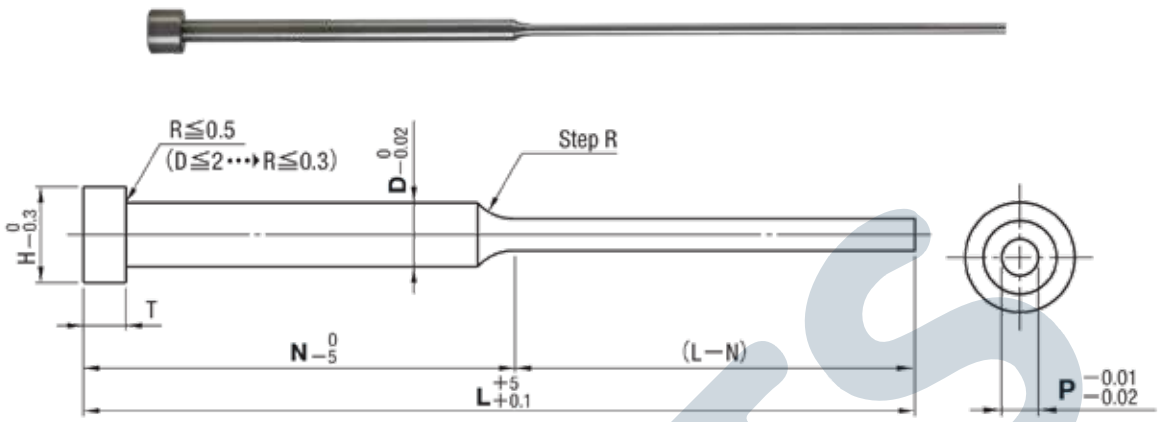

Code	Head thickness	T T
ENS	4mm (T4)	0 -0.02
EJS	6mm (JIS)	0 -0.05

Code	ENS / EJS
Material	SKD61
Hardness	40 - 45 HRC / 900 HV ~

Order Code D x L x P x N
ENS 2 x 200 x P1.0 x N100

Code	D	H	T	L	P	N
ENS	1.5	3	4	100	0.8 1.0	40 50 60 70
				150	0.8 1.0	40 50 60 70
	2	4		100	0.8 1.0 1.2 1.5	40 50 60 70
				150	0.8 1.0 1.2 1.5	40 50 60 70 80 90 100
				200	0.8 1.0 1.2 1.5	50 60 70 80 90 100 120
	2.5	5		100	1.0 1.2 1.5 1.8 2.0	50 60 70
				150	1.0 1.2 1.5 1.8 2.0	50 60 70
				200	1.0 1.2 1.5 1.8 2.0	50 60 70 80 90 100 120
	3	6		100	1.5 1.8 2.0 2.5	50 60 70
				150	1.5 1.8 2.0 2.5	50 60 70
				200	1.5 1.8 2.0 2.5	50 60 70 80 90 100 120
EJS	4	8	6	150	1.5 2.0 2.5 3.0	50 70
				200		50 70 100 120
				250		100 120
	5	9		150	3.0 3.5 4.0	50 70
				200		50 70 100 120
				250		100 120
	6	10		150	4.0	50 70
				200		50 70 100 120
				250		100 120

หมายเหตุ ลูกค้าสามารถสั่งทำขนาดอื่นๆ นอกเหนือจากในตารางได้

Sleeve Ejector Pins
ปลอกกระทุ้ง (ESJ)

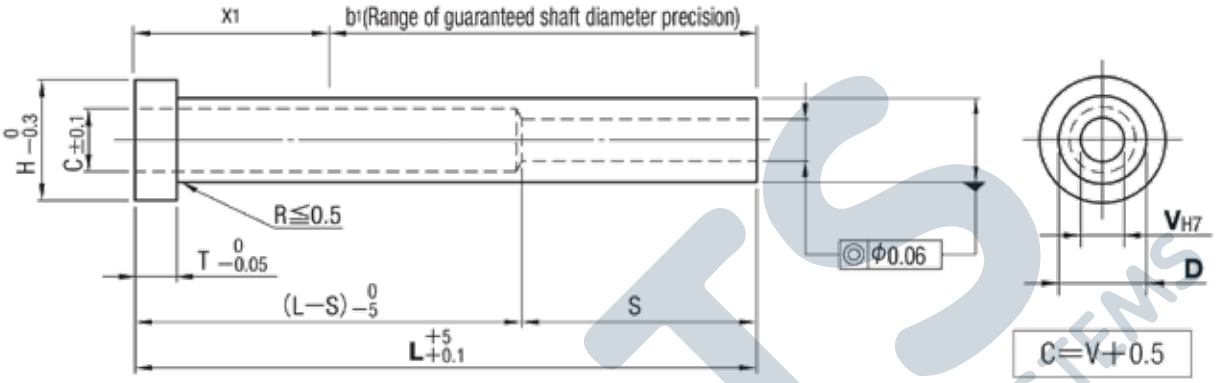

Code	ESJ
Material	SKD61
Hardness	35 - 40 HRC / 900 HV ~

Order Code D x L x V
ESJ 6 x 100 x V4

D

D ≤ 12	D ≥ 15
-0.01	-0.01
-0.02	-0.03

V

V ≤ 3	3.5 ≤ V ≤ 6	6.5 ≤ V ≤ 10	V ≥ 12
+0.010	+0.012	+0.015	+0.018
0	0	0	0

Code	D	H	T	L	V
ESJ	4	8	6	100 120 140	1.5
				100 120 140 160 180 200	2 2.5
	4.5			100 120 140	1.5
				100 120 140 160 180 200	2 2.5
	5	9		100 120 140 160 180 200 225	2 2.5 3
				250 275 300	3
	5.5			100 120 140 160 180 200 225	2 2.5 3
				250 275 300	3
	6	10		100 120 140 160 180 200 225 250 275 300	2 2.5 3 3.5 4
				325 350 375 400 425 450	3 3.5
	6.5	11		100 120 140 160 180 200 225 250 275 300	2 2.5 3 3.5 4
				325 350 375 400 425 450	3 3.5 4
	7			100 120 140 160 180 200 225 250 275 300	2 2.5 3 3.5 4 4.5
				325 350 375 400 425 450	3 3.5 4 4.5
	7.5	12		100 120 140 160 180 200 225 250 275 300	3 3.5 4 4.5
				325 350 375	3.5 4 4.5
	8	13	8	100 120 140 160 180 200 225 250 275 300	2 2.5 3 3.5 4 4.5 5 5.5
				325 350 375 400 425 450	3 3.5 4 4.5 5
				475 500	5
	9	14		100 120 140 160 180 200 225 250 275 300	2 2.5 3 3.5 4 4.5 5 5.5
				325 350 375 400 425 450	3 3.5 4 4.5 5
				475 500	5 5.5 6
	10	15		100 120 140 160 180 200 225 250 275 300 325 350 375 400 425 450	4 4.5 5 6 6.5 7
				475 500	5 5.5 6 6.5 7
	12	17		100 120 140 160 180 200 225 250 275 300 325 350 375 400 425 450	4 4.5 5 5.5 6 6.5 7 8 8.5
				475 500	5 5.5 6 6.5 7 8
	15	20		200 225 250 275 300 325 350 375 400 425 450 475 500	9 10
	20	25		200 225 250 275 300 325 350 375 400 425 450 475 500	12 15

L	100	120	140	160	180	200	225	250	275	300	325	350	375	400	425	450	475	500
S	50 (V1.5 → 40)			75			100			115			150					

หมายเหตุ ลูกค้าสามารถสั่งทำขนาดอื่นๆ นอกเหนือจากในตารางได้

MTS MASTER TECH & SYSTEMS
MasterTech @mts-th
www.mastertechandsystems.com
02-756-0000

Flat Ejector Pins
เข็มกระทุ้งแบน SKH51 (ERPH / ERJ)

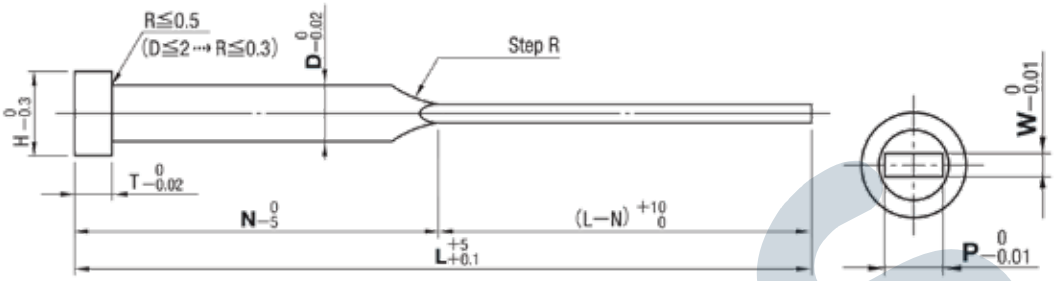

Code	Head thickness	⊤P , ⊤W
ERPH	4mm (T4)	0
ERJ	6 • 8mm (JIS)	-0.01

Code	ERPH / ERJ
Material	SKH51
Hardness	58 - 60 HRC

Order Code D x L x P x W x N
ERPH 2 x 150 x P1.0 x W0.8 x N50

Code 4mm head	Code JIS head	D	4mm head H	4mm head T	JIS head H	JIS head T	L	P	W	N
ERPH	-	1.5	3	4	-	-	100 150	0.8 1.0 1.2	0.3 0.4 0.5 0.6	40 50 60 70 80
		2	4				100 150 200	1.0 1.2 1.5	0.4 0.5 0.6 0.7 0.8 1.0	40 50 60 70 80
		2.5	5				100 150 200	1.5 2.0	0.4 0.5 0.6 0.7 0.8 1.0 1.2 1.5	40 50 60 70 80 90 100
		3	6				100 150 200	2.0 2.5	0.4 0.5 0.6 0.7 0.8 1.0 1.2 1.5 2.0	40 50 60 70 80 90 100 120
		3.5	7				100 150 200 250	2.5 3.0	0.4 0.5 0.6 0.7 0.8 1.0 1.2 1.5 2.0	40 50 60 70 80 90 100 120
	ERJ	4			8	6	100 150 200 250	3.0 3.5	0.4 0.5 0.6 0.7 0.8 0.9 1.0 1.2 1.5 2.0	40 50 60 70 80 90 100 120
		4.5	8				100 150 200 250	3.5 4.0	0.6 0.7 0.8 0.9 1.0 1.2 1.5 1.8 2.0 2.5	40 50 60 70 80 90 100 120
		5			9		100 150 200 250	4.0	0.6 0.7 0.8 0.9 1.0 1.2 1.5 1.8 2.0 2.5	40 50 60 70 80 90 100 120
		5.5	9				100 150 200 250	4.5 5.0	0.8 0.9 1.0 1.2 1.5 1.8 2.0 2.5	40 50 60 70 80 90 100 120
		6			10		150 200 250	5.0	0.8 0.9 1.0 1.2 1.5 1.8 2.0 2.5	40 50 60 70 80 90 100 120
		6.5	10		11		150 200 250	6.0	0.8 0.9 1.0 1.2 1.5 1.8 2.0	40 50 60 70 80 90 100 120
		7					150 200 250 300	6.0	0.8 0.9 1.0 1.2 1.5 1.8 2.0 2.5	40 50 60 70 80 90 100 120 150 180 200
		8	11		13	8	150 200 250 300	6.0	0.8 0.9 1.0 1.2 1.5 1.8 2.0 2.5	40 50 60 70 80 90 100 120 150 180 200
		10	15		15		150 200 250 300	8.0	0.8 0.9 1.0 1.2 1.5 1.8 2.0 2.5	40 50 60 70 80 90 100 120 150 180 200
-		12	-	-	17		150 200 250 300	10.0	1.2 1.5 1.8 2.0 2.5	40 50 60 70 80 90 100 120 150 180 200

หมายเหตุ ลูกค้าสามารถสั่งทำขนาดอื่นๆ นอกเหนือจากในตารางได้

Flat Ejector Pins
เข็มกระทุ้งแบน SKD61 (ERNX)

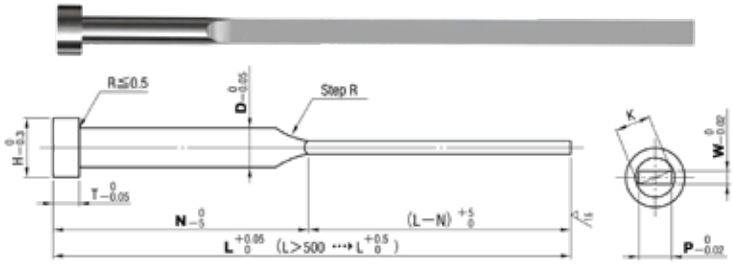

Code	ERNX
Material	SKD61
Hardness	40 - 45 HRC / 900 HV ~

Order Code D x L x P x W x N
ERNX 12 x 400 x P10.0 x W2.5 x N200

Code	D	H	T	0.01mm increments L	P	W	N 1mm increments
ERNX	4	8	6	200.00 - 350.00	2.00 - 3.70	1.00 ~	N ≥ 40 and (L - N) ≤ 200
	5	9			2.50 - 4.70	1.00 ~	
	6	10		200.00 - 500.00	3.00 - 5.50	2.00 ~	▪ D6 - 8 : N ≥ 45 ▪ D10 - 16 : N ≥ 50 ▪ D20 - 25 : N ≥ 55 and N ≥ L/3 350 ≥ (L/N) ≥ 10
	7	11			3.30 - 6.60	2.00 ~	
	8	13	8		3.30 - 7.60	2.00 ~	
	10	15			5.00 - 9.60	2.00 ~	
	12	17		200.00 - 500.00	6.00 - 11.70	2.00 ~	
	13	18			6.00 - 12.70	2.00 ~	
	15	20			8.00 - 14.70	2.00 ~	
	16	21		200.00 - 500.00	8.00 - 15.70	2.00 ~	
	20	25			10.00 - 19.70	2.00 ~	
	25	30			13.00 - 24.70	2.50 ~	

หมายเหตุ ลูกค้าสามารถสั่งทำขนาดอื่นๆ นอกเหนือจากในตารางได้

Runner Lock Pins สลักล็อกรันเนอร์ (RLR / RLRL)

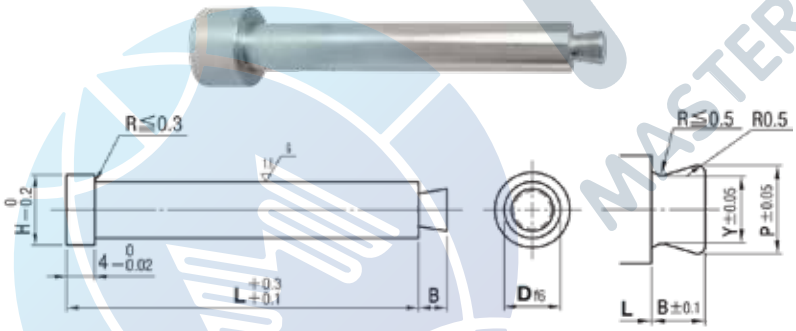

Code	RLR / RLRL
Material	SKH51
Hardness	58 - 60 HRC

Order Code D x L
RLR 2 x 40

Code	D	H	B	P	Y	L
RLR	2	4	2	1.5	1.0	15 20 25 30 35 40
	3	5		2.3	1.8	15 20 25 30 35 40 45 50 60
	4	6	2.5	2.8	2.3	20 25 30 35 40 45 50 60 70 80
	5	7	3	3.3	2.8	20 25 30 35 40 45 50 60 70 80
	6	8		3.8	3.0	30 35 40 45 50 60 70 80
	8	10	4	5.8	5.0	30 35 40 45 50 60 70 80

Code	D	H	B	P	Y	L 0.1 mm increments
RLRL	2	4	2	1.5	1.0	10.0 - 100.0
	2.5	5		2.0	1.5	
	3			2.3	1.8	
	4	6	2.5	2.8	2.3	
	5	7	3	3.3	2.8	
	6	8		3.8	3.0	15.0 - 100.0
	8	10	4	5.8	5.0	

MTS MASTER TECH & SYSTEMS
MasterTech @mts-th
www.mastertechandsystems.com
02-756-0000

Sprue Bushes
หัวฉีด (SB)

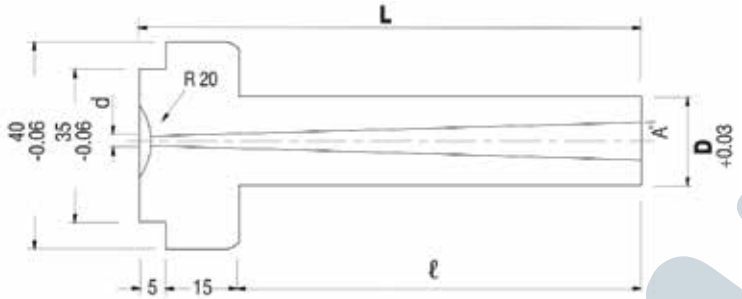

Code	SB
Material	S45C

Order Code D x L
SB 25 x 110

Code	D	L	d	A	ℓ
SB	12	50	3.3 + 0.1	6	30
		65		4	45
		80		4	60
		95		3	75
		110	3.5 + 0.1	3	90
		140		3	120
	16	50	3.3 + 0.1	6	30
		65		4	45
		80		4	60
		90		3	70
		100		3	80
		110	3.5 + 0.1	3	90
		120		3	100
		140		3	120
		170		2.3	150
	20	50	3	3	30
		65	3.3 + 0.1	4	45
		80		4	60
		95		3	70
		100		3	80
		110	3.5 + 0.1	3	90
		120		3	100
		140		3	120
		170		2.3	150
		200		2.3	180
	25	50	3	3	30
		80	3.3 + 0.1	3	60
		95		3	75
		110	3.5 + 0.1	3	90
		130		3	110
		140		3	120
		170		2.3	150
		200		2.3	180

MTS MASTER TECH & SYSTEMS

Sprue Bushes
หัวฉีด (SBBP / SBBK / SBBS / SBGP / SBGK / SBGS)

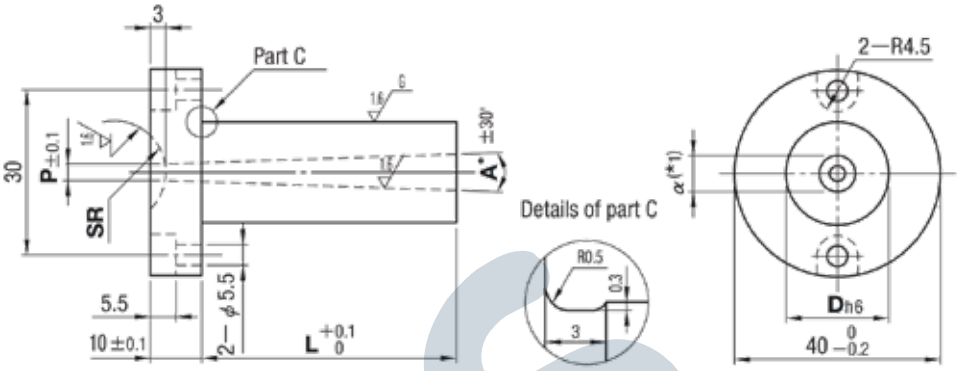

Code	Material	Hardness
SBBP	HPM1	37 - 43 HRC
SBBK	SKD61	48 - 52 HRC
SBBS	DC53	58 - 62 HRC

Order Code D x L x SR x P x A
SBBP 20 x 80.0 x SR16 x P3 x A2

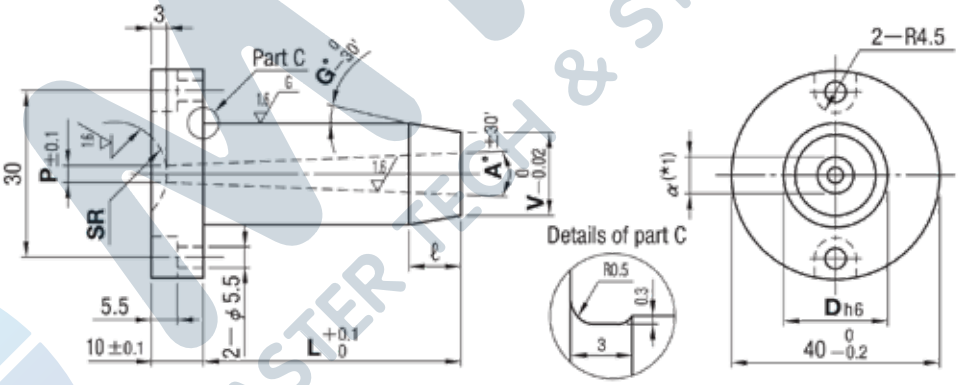

Code	Material	Hardness
SBGP	HPM1	37 - 43 HRC
SBGK	SKD61	48 - 52 HRC
SBGS	DC53	58 - 62 HRC

Order Code D x L x SR x P x A x V x G
SBGP 16 x 90.0 x SR12 x P3 x A2 x V14 x G5

Code	Dh6		L	SR	P	A°	V	G°
SBBP SBBK SBBS SBGP SBGK SBGS	8	0 -0.009	0 - 80.0	0 10.5 11	2 2.5 3 3.5	0.5 - 3 (*)	D>V≥α+2	1 - 10
	10		0 - 120.0	0 10.5 11 12 13 16 20	2 (*) 2.5 (*) 3 (*) 3.5 4 4.5 5 5.5 6 6.5 7 8	0.5 - 4 (*)		
	12	0 -0.011	0 - 150.0					
	13							
	16							
	20	0 -0.013	0 - 200.0					

(*) L Dimension Limits

P	2			2.5			3		3.5 - 4.5	
A	0.5	1	1.5 - 4.0	0.5	1	1.5 - 4.0	0.5	1 - 1.5	0.5	1 - 1.5
L Dimension Limits	30	50	85	45	50	85	60	85	60	150

MTS MASTER TECH & SYSTEMS
MasterTech @mts-th
www.mastertechandsystems.com
02-756-0000

Sprue Bushes
หัวฉีด (SBSM / SBSD / SBSS / SBTM / SBTD / SBTS)

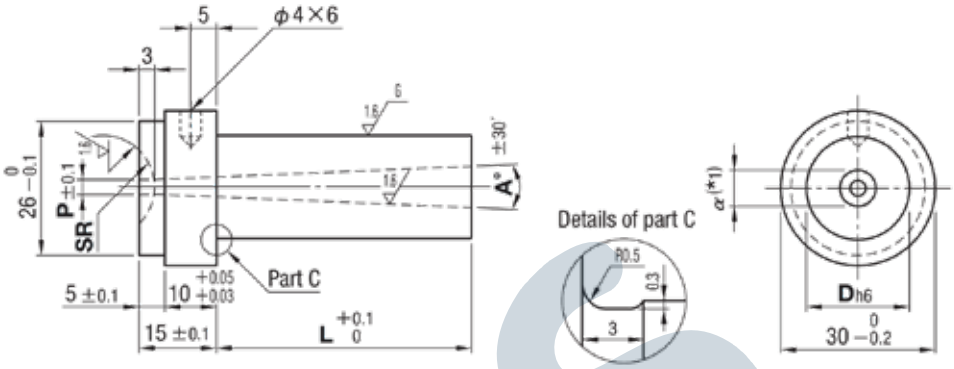

Code	Material	Hardness
SBSM	HPM1	37 - 43 HRC
SBSD	SKD61	48 - 52 HRC
SBSS	DC53	58 - 62 HRC

Order Code D x L x SR x P x A
SBSD 20 x 50.0 x SR20 x P4 x A2

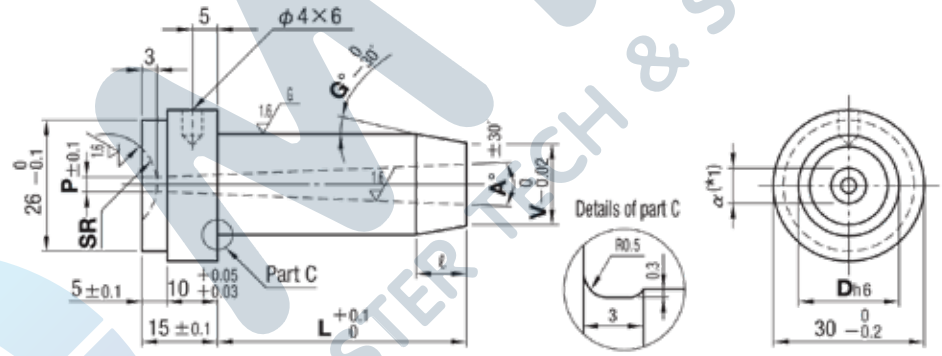

Code	Material	Hardness
SBTM	HPM1	37 - 43 HRC
SBTD	SKD61	48 - 52 HRC
SBTS	DC53	58 - 62 HRC

Order Code D x L x SR x P x A x V x G
SBTD 25 x 60.0 x SR21 x P5 x A3 x V20.0 x G5

Code	Dh6		L	SR	P	A°	V	G°
SBSM SBSD SBSS SBTM SBTD SBTS	8	0 -0.009	0 - 80.0	0 10.5 11	2 2.5 3 3.5	0.5 - 3 (*)	D>V≥α+2	1 - 10
	10		0 - 120.0	0 10.5 11 12 13 16 20 21 23	2 (*) 2.5 (*) 3 (*) 3.5 4 4.5 5 5.5 6 6.5 7 8	0.5 - 4 (*)		
	12	0 -0.011	0 - 150.0					
	13							
	16							
	20	0 -0.013	0 - 200.0					
	25							

(*) L Dimension Limits

P	2			2.5			3		3.5 - 4.5	
A	0.5	1	1.5 - 4.0	0.5	1	1.5 - 4.0	0.5	1 - 1.5	0.5	1 - 1.5
L Dimension Limits	30	50	85	45	50	85	60	85	60	150

Locating Rings
แหวนรองหัวฉีด (LRA / LRBS)

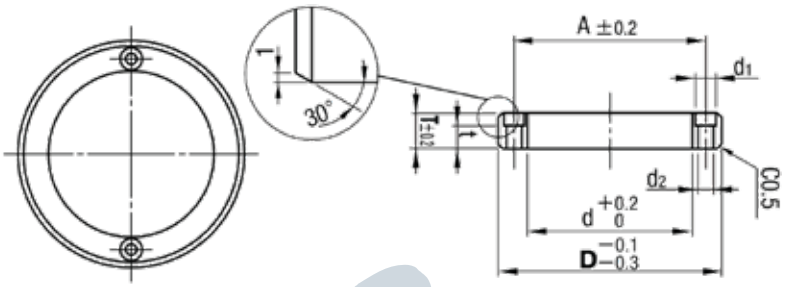

Code	LRA / LRBS
Material	S45C

Order Code D
LRA 100
D x T
LRBS 100 x 15

Code	D	d	A	d1	d2	t	T
LRA	100	70	85	11	6.5	8	15
	120	90	105				

Code	D	T	d	A	d1	d2	t	Bolts
LRBS	60	10 15 20 25	40	50	9	5.5	5	M5
	100	10	70	85	11	6.5	3	M6
		15 20 25					8	
	120	10	90	105			3	
		15 20 25					8	
	150	15 20 25	110	130	14	9	6	M8

Locating Rings แหวนรองหัวฉีด (LRB / LRJS)

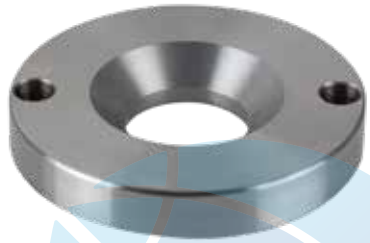

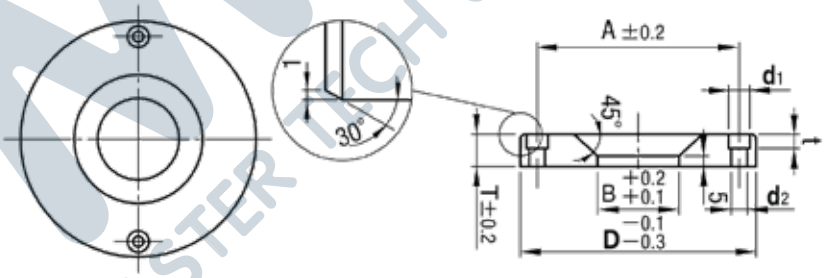

Code	LRB / LRJS
Material	S45C

Order Code D x T x B
LRB 100 x 15 x 36

Code	D	T	B	A	d1	d2	t	Bolts
LRB	100	15	36	85	11	6.5	6.5	M6
	120							

Code	D	T	B	A	d1	d2	t	Bolts
LRJS	100	15 20 25	35 40 50	85	11	6.5	6.5	M6
	120	15 20	35 40 50					
	150	15 20	35 40 50	100	14	9	8.6	M8

Locating Rings แหวนรองหัวฉีด (LRK)

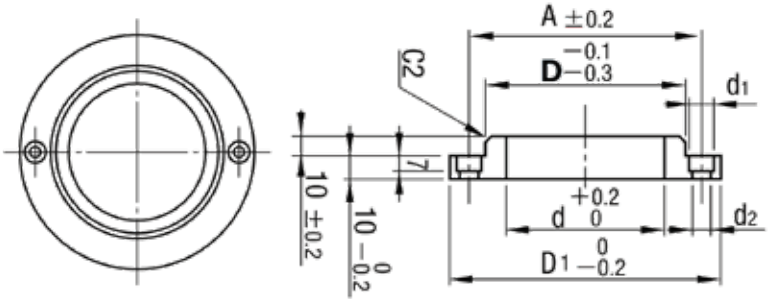

Code	LRK
Material	S45C

Order Code D
LRK 100

Code	D	Applicable bolts	Bolt hole d2	Bolt hole d1	D1	d	A
LRK	100	M 6	6.5	11	130	85	115
	120				150	105	135

MTS MASTER TECH & SYSTEMS
MasterTech @mts-th
www.mastertechandsystems.com
02-756-0000

Plain Guide Rails
ไกด์เรล (GRS / GRSM)

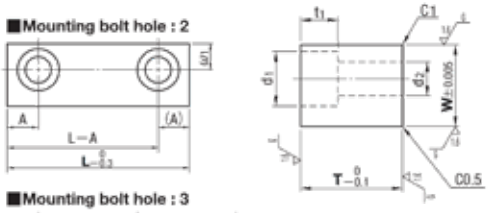

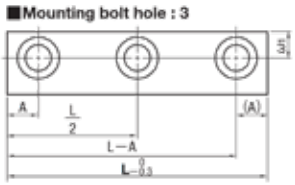

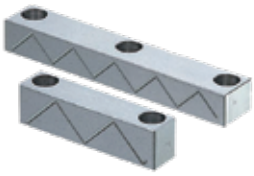

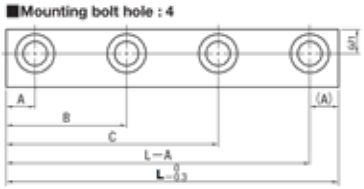

■Details of Oil Groove

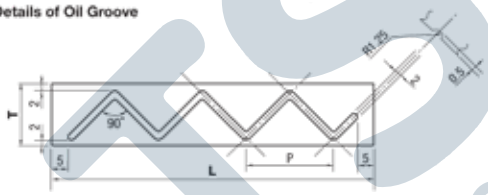

Table for Bolt Hole Size

W	T	d1	d2	t1	ω1
10	5	8	4.5	3.5	4.5
	10 15			5	
12.5	5	8	4.5	3.5	5
	10 15 20			5	
15	5	8	4.5	3.5	6
	10 15 20 25	9.5	5.5	6	
20	15 20	11	6.5	7	9
	25 30	14	9	9	
25	20 25 30 35	14	9	9	10
30	30 35	17	11.5	11	11

Oil Groove Pitch

T	P
10	8
15	18
20	28
25	38
30	48
35	58

Code	GRS (Non-oil groove) GRSM (Oil groove)
Material	SKS3
Hardness	53 - 56 HRC

Order Code W x T x L
GRS 15 x 20 x 80

Code	W	T	L	No. of bolt holes	A	B	C
GRS (Non-oil groove) GRSM (Oil groove)	10	(5)	30 35 40	2	7.5	-	-
			50 60	3			
		10 15	35 40	2			
			50 60 70	3			
			80	4		30	50
			90			32.5	57.5
			100			35	65
	12.5	(5)	30 35 40	2	7.5	-	-
			50 60	3			
		10	35	2			
		10 15 20	40				
			50 60 70	3			
			80	4		30	50
			90			32.5	57.5
			100			35	65
	15	(5)	40 50 60	2	7.5	-	-
		10 15 20 25	40 50 60	2			
			70 80 90 100 110 120	3			
			130	4		40	90
			140			45	95
			150			53	97
	20	15 20 25 30	40 50 60 70 80 90	2	10	-	-
			100 110 120 130 140 150	3			
			160	4		55	105
			180			60	120
			200			70	130
	25	20 25 30	40 50 60 70 80 90	2	10	-	-
			100 110 120 130 140 150	3			
			160	4		55	105
			180			60	120
			200			70	130
GRSM (Oil groove)		35	120 130 140 150	3		-	-
			160	4		55	105
			180			60	120
			200			70	130
	30	30 35	120 130 140 150	3	12	-	-
			160				
			180	4		60	120
			200			70	130

หมายเหตุ (5) มีเฉพาะรหัส GRS

Taper Pins
เทเปอร์พิน (TPN / TPNV)

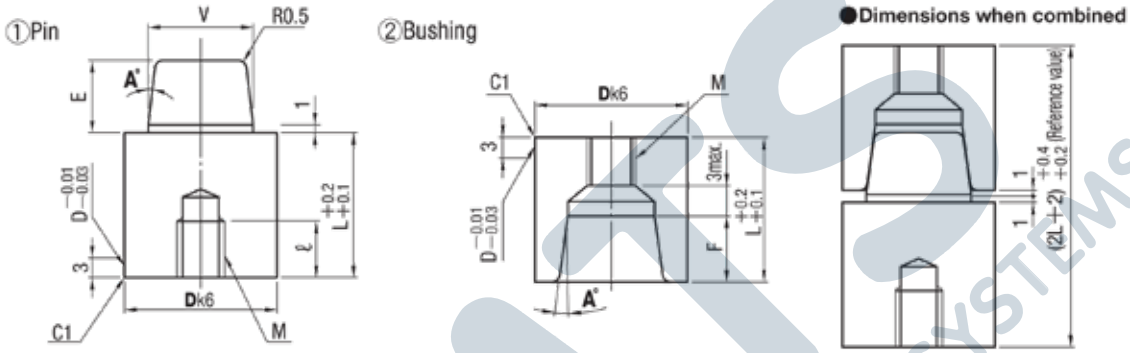

Code	TPN
Material	SKD11
Hardness	58 - 62 HRC
Concentricity	Match mark type

Order Code D x A
TPN 25 x 5

Code	TPNV
Material	SKD11
Hardness	58 - 62 HRC
Concentricity	0.01 or less

Order Code D x A
TPNV 20 x 3

Code	Dk6		A°
TPN	13	+0.012	1
	16	+0.001	3
	20	+0.015	5
	25	+0.002	10
	30		
	32	+0.018	
	35	+0.002	
	42		

Code	Dk6		A°
TPNV	10	+0.010 +0.001	1
	13	+0.012	3
	16	+0.001	5
	20	+0.015	
	25	+0.002	
	30		
	32	+0.018	
	35	+0.002	

D	L	V	E	F	① Pin		② Setting tap for bushing
					M	ℓ	
10	14	7	6	5	M 4	10	M 4
13	14	7	6	5	M 4	10	M 4
16	14	10	6	5	M 5	10	M 5
20	19	13	9	8	M 6	12	M 6
25	24	16	12	11	M 8	16	M 8
30	29	20	15	14	M 10	20	M 10
32	29	20	15	14	M 10	20	M 10
35	34	24	18	17	M 12	24	M 12
42	39	30	24	23	M 12	24	M 12

MTS MASTER TECH & SYSTEMS
MasterTech @mts-th
www.mastertechandsystems.com
02-756-0000

Puller Bolts
พูลเลอร์โบลท์ (PBTN)

Code	PBTN
Material	SCM440
Hardness	33 - 38 HRC

Order Code D x L
PBTN 25 x 200

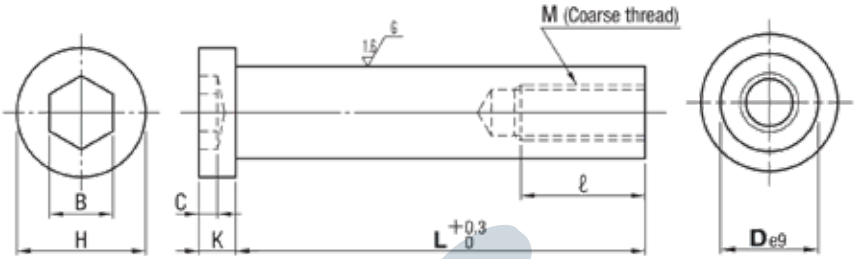

Code	De9		H	K	C	B	M	ℓ	L 10mm increments
PBTN	10	-0.025 -0.061	16	8	4	6	M 6	17	40 - 180
	13	-0.032	18	8	4	8	M 8	20	60 - 280
	16	-0.075	24	13	7	10	M 10	23	100 - 300
	20	-0.040	27	13	9	14	M 12	26	120 - 400
	25	-0.092	33	18	10	17	M 16	32	170 - 400

Stop Bolts สต็อปโบลท์ (STBG)

Code	STBG
Material	SCM440
Hardness	33 - 38 HRC

Order Code D x L x E
STBG 16 x 20 x 30

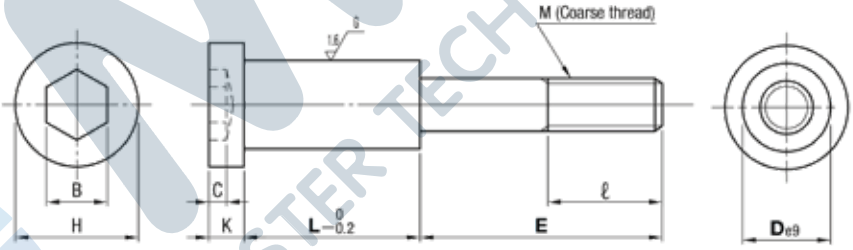

Code	De9		H	K	C	B	M	ℓ	L	E
STBG	10	-0.025 -0.061	16	8	4	6	M 6	17	10	19 24
									15	19 24 29
									20	19 24 29 34
	13	-0.032 -0.075	18	8	4	8	M 8	20	10	22 27
									15	22 27 32 37
									20	22 27 32 37 42
									25	27 32 37 42
									30	27 32 37 42 47
									35	37 42 47
	16		24	13	7	10	M 10	23	10	30 35
									15	30 35 40
									20	30 35 40 45
									25	30 35 40 45 50
									30	35 40 45 50 55
									35	45 50 55
	20	-0.040 -0.092	27	13	9	14	M 12	26	15	38 43
									20	38 43 48
									25	38 43 48 53
									30	48 53 58
									35	48 53 58
									45	53 58
	25		33	18	10	17	M 16	32	15	44 49
									20	49 54 59
									25	49 54 59
									30	49 54 59 64
									40	54 59 64 69

MTS MASTER TECH & SYSTEMS

Slide Adjustment Plates
แผ่นเพลทปรับสไลด์ (SAS / SASM / SAPZ)

SAS

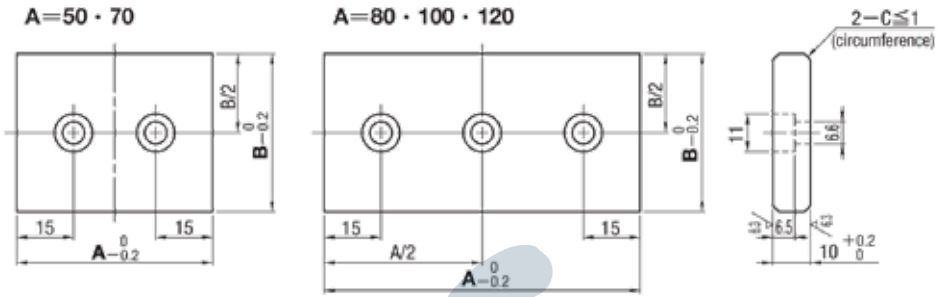

SASM

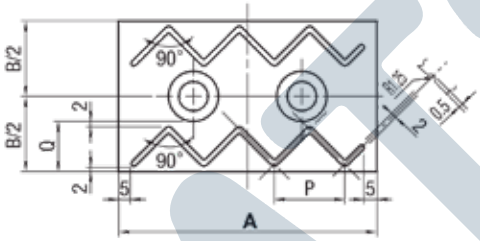

Oil Groove Pitch

B	Q	P
30	9.5	7
40	14.5	17
50	19.5	27
60	24.5	37

SAPZ

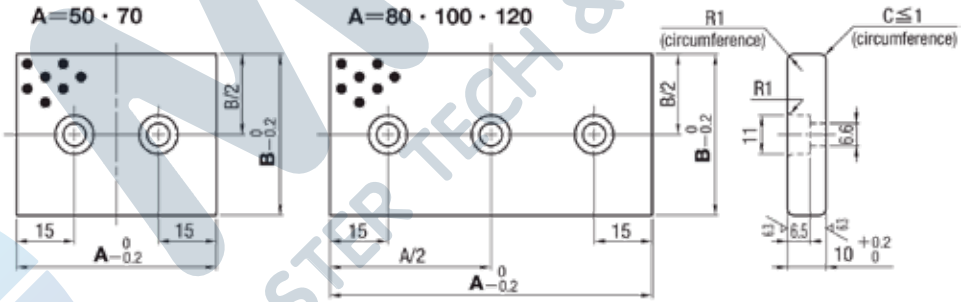

Code	Material	Hardness
SAS (Non-oil groove)	SKS3	53 - 56 HRC
SASM (Oil groove)	SKS3	53 - 56 HRC
SAPZ (Oil free)	Brass with graphite	-

Order Code A x B
SAPZ 50 x 30

Code	A	B
SAS (Non-oil groove) SASM (Oil groove) SAPZ (Oil free)	50	30
		40
	70	30
		40
		50
	80	30
		40
		50
		60
	100	40
		50
		60
	120	40
		50
		60

MTS MASTER TECH & SYSTEMS
MasterTech @mts-th
www.mastertechandsystems.com
02-756-0000

Oil Free Slide Units
ชุดสไลด์ออยฟรี (SCZN)

Item	Components	Material	Pcs
①	**Slide base**	S55C	2
②	**Inclined pin holder**	SCM440	1
③	**Slide plate**	Brass + Graphite	2
④	**Parallel Key**	S45C	1
⑤	**Stopper**	SS400	2

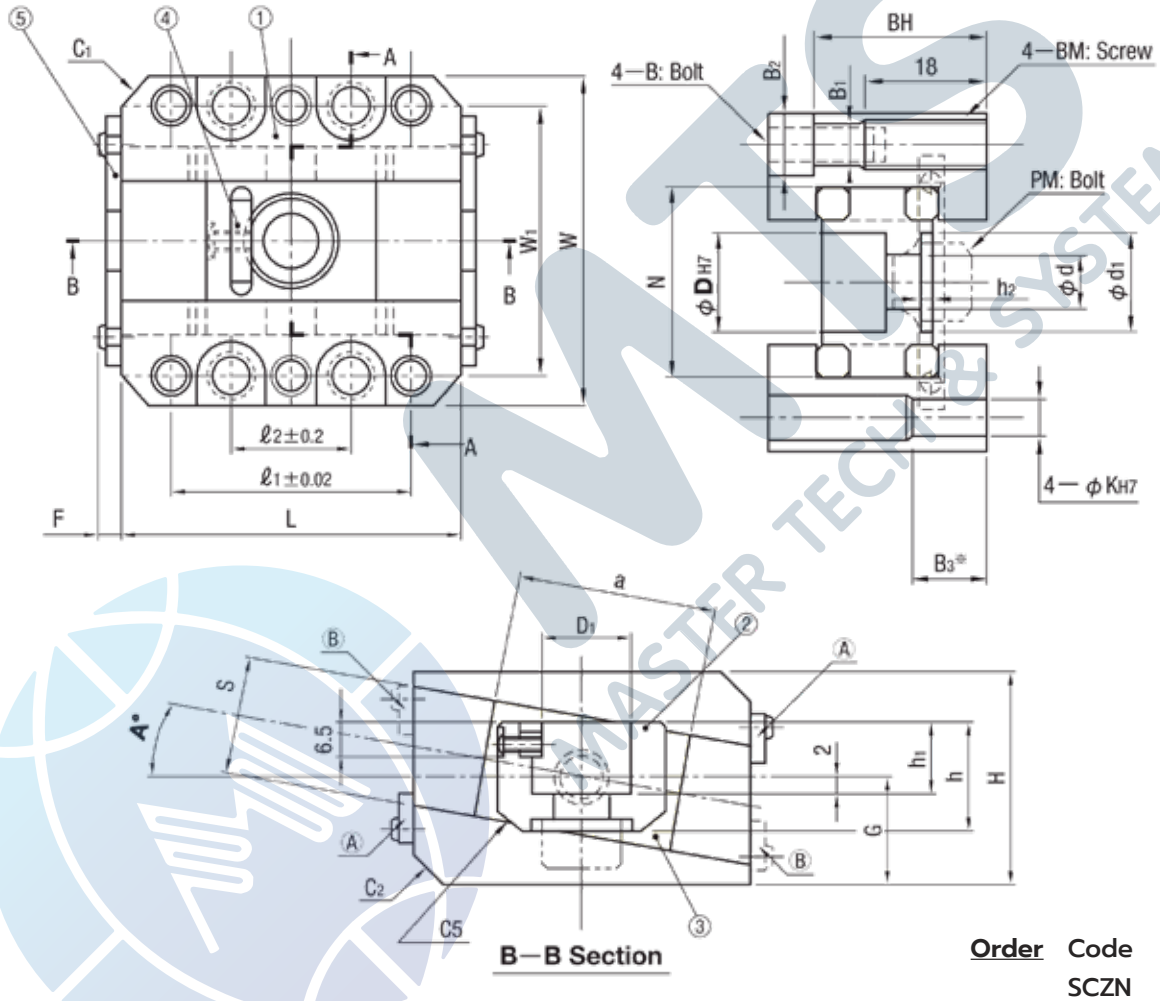

Order Code D - A
SCZN 16 - 0

Code	D	A°	Slide base					Inclined pin holder							Slide plate		G	F
			W	L	H	C_1	C_2	D_1	d	d_1	h	h_1	h_2	N	S	a		
SCZN	12	0 - 10	56	55	35	5	-	11	5.5	-	16	10	-	30	20	35	17.5	4.65
	16		60	65	36	6	-	15	9	16	18	11	3	33	20	40	18	4.65
	20		68	70	43	6	5	18	11	20	22	13	5.5	38	24	40	21.5	4.65
	25		75	80	45	6	5	22	11	20	26	15	5.5	45	26	45	22.5	4.65
	30		81	95	54	6	5	27.5	11	20	30	17	3.5	51	30	55	27	4.65

D	Bolt hole dimensions									Mounting position of stopper	
	ℓ_1	ℓ_2	W_1	B_1	B_2	B_3	BM	BH	K	Ⓐ	Ⓑ
12	42	21	45	6.6	11	15	M 8	28.5	6	0° - 10°	-
16	46	25	48	6.6	11		M 8	29.5	6	0° - 10°	-
20	50	25	55	8.6	13.5	20	M 10	34.5	8	4° - 10°	0° - 3°
25	60	35	62	8.6	13.5		M 10	36.5	8	4° - 10°	0° - 3°
30	75	50	68	8.6	13.5		M 10	45.5	8	0° - 10°	-

Oil Free Inclined Pin Holders
ชุดสไลด์ยึดพินเอียงออยฟรี (SCZNP)

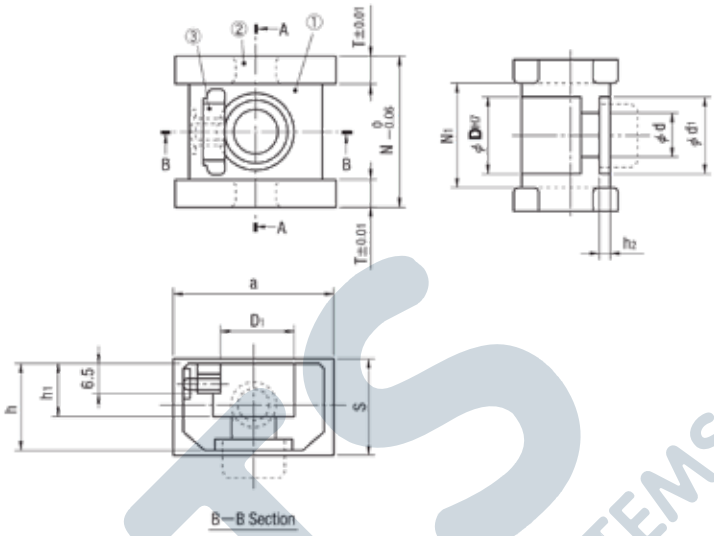

Order Code D
SCZNP 16

Item	Components	Material	Pcs
①	**Inclined pin holder**	SCM440	1
②	**Slide plate**	Brass + Graphite	2
③	**Key**	S45C	1

Code	D	① Inclined pin holder Common with SCZN ② Inclined pin holder								② Slide plate Common with SCZN ③ Slide plate		
		D_1	d	d_1	h	h_1	h_2	N	N_1	S	a	T
SCZNP	**12**	11	5.5	-	16	10	-	30	17	20	35	6.5
	16	15	9	16	18	11	3	33	20	20	40	6.5
	20	18	11	20	22	13	5.5	38	25	24	40	6.5
	25	22	11	20	26	15	5.5	45	31	26	45	7
	30	27.5	11	20	30	17	3.5	51	36	30	55	7.5

Slide Locks สไลด์ล็อค (SLLK)

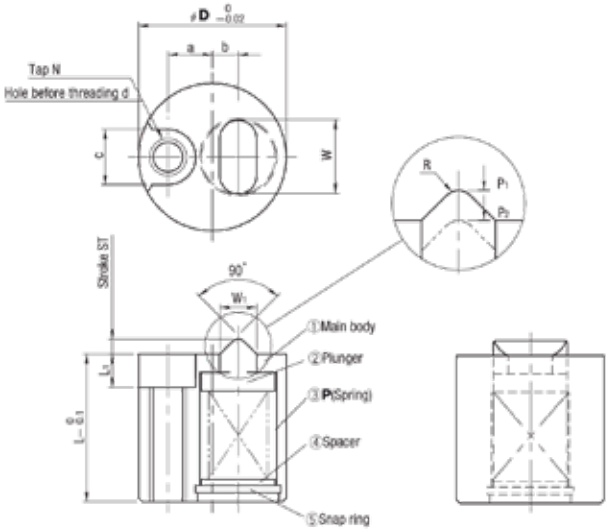

Code	SLLK
Material	SUJ2
Hardness	58 HRC ~

Order Code D x P
SLLK 16 x F

Code	D	P	ST	L	L1	a	b	c	d	Bolt size	Tap N	W	W1	R	Load (N) P1 [min.]	Load (N) P2 [max.]
SLLK	**16**	**C** (SWC8 - 15)	1.6	15	3.3	5	2.5	6	3.2	M3	M4	8	4	1	22.5	28.6
		F (SWF8 - 15)													62.0	78.8
	20	**F** (SWF10 - 15)	2	20	4.5	6	3.5	7.5	4.3	M4	M5	10	5	1.1	36.7	62.9
		L (SWL10 - 15)													64.1	110

MTS MASTER TECH & SYSTEMS
MasterTech @mts-th
www.mastertechandsystems.com
02-756-0000

Latch Locks
ตัวล็อคแม่พิมพ์ (DTP)

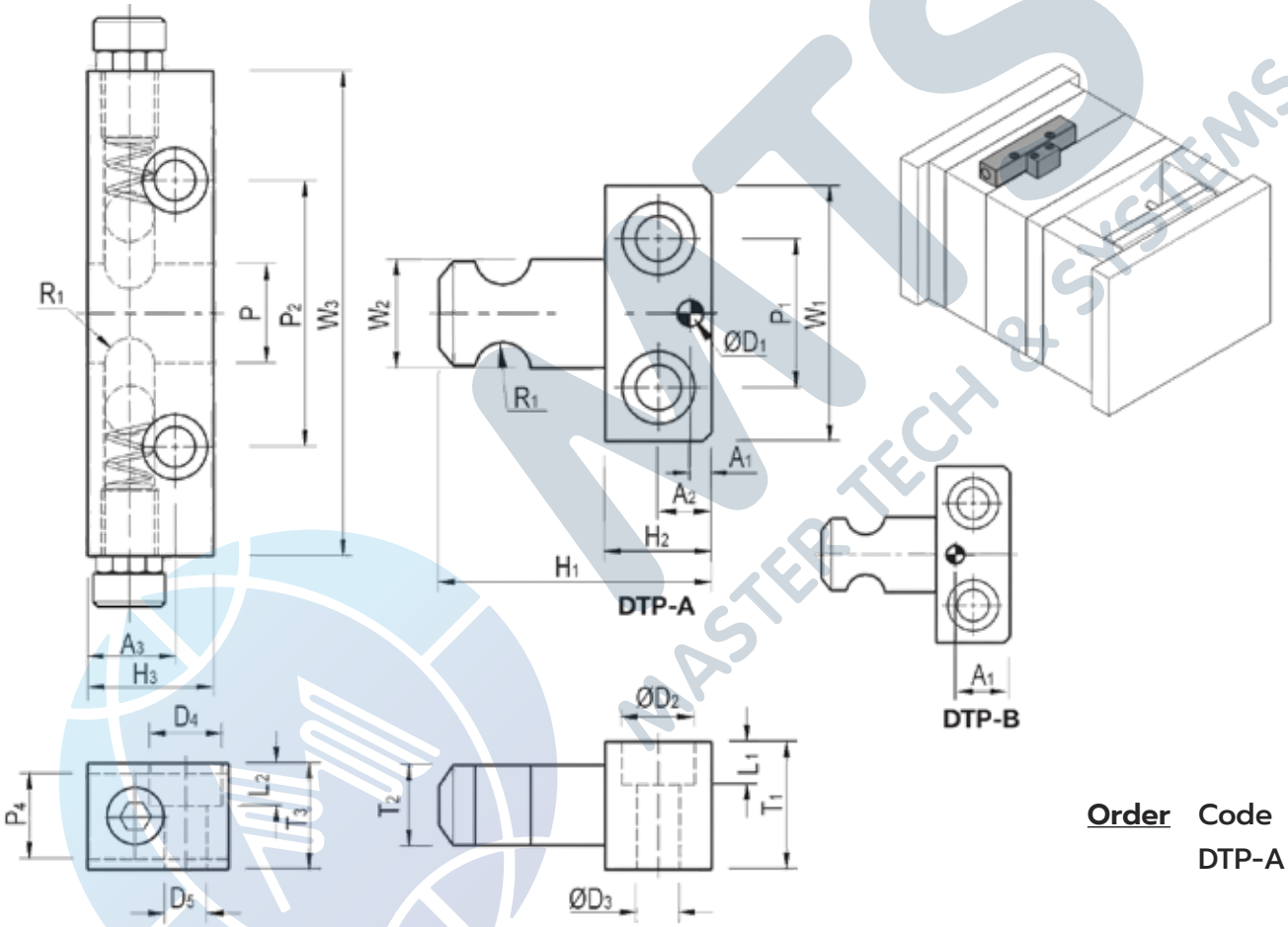

Order Code
DTP-A

Code	P	P1	P2	P4	R1	T1	T2	T3	W1	W2	W3
DTP-A	18	25	60	12.5	R4.25	20.5	12	20.5	40	17.5	86
DTP-B	26	35	70	20	R6.5	30	19.5	25	60	25.5	127.5

A1	A2	A3	D1	D2	D3	D4	D5	H1	H2	H3	L1	L2
6	12	21	Ø5	Ø10.5	Ø6.5	Ø11	Ø6.5	48	20	28	6.5	6.5
20	12.5	23	Ø6	Ø17	Ø10	Ø17	Ø10	62.5	25	33	10	10

Taper Block Sets
ชุดเทเปอร์บล็อค (TBS)

■Mounting bolt hole: 2 (L30~120)

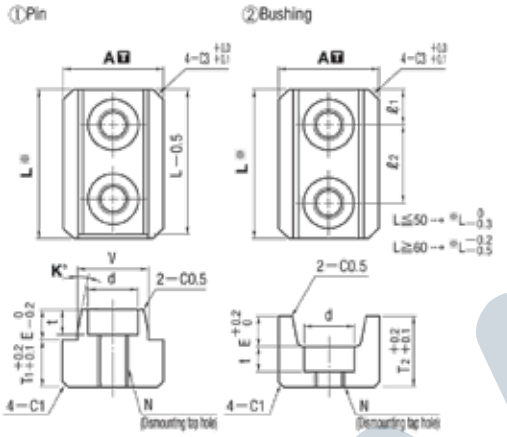

■Mounting bolt hole: 1 (L20~25, excpet A12 and A16)

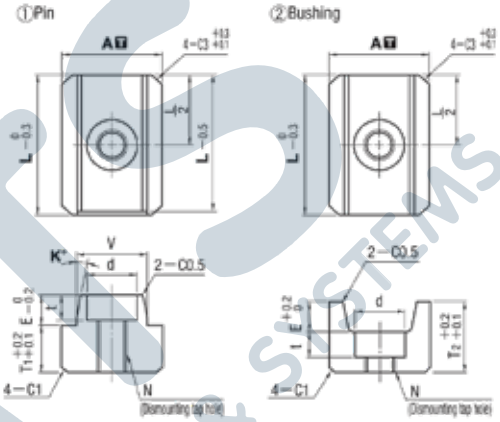

■Mounting bolt hole: 1 (A12 and A16 only)

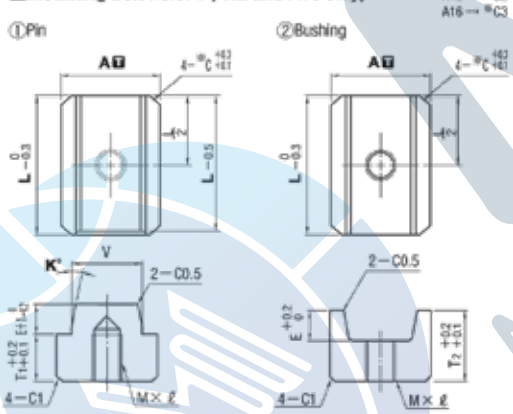

●Dimensions when combined

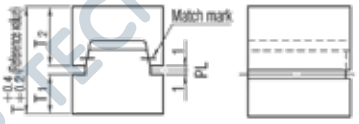

Order	Code	A	x	L	x	K
	TBS	20	x	25	x	5

Code	T A	V dimension symmetry against A plane		Material	Hardness
TBS	+0.02 0	(Match mark type)	To add fitting processing, not applicable to combination with other than sets.	SKD11 equivalent	58 - 62 HRC

Code	A	L	K°	V	E	T	T1	T2	Bolt hole ℓ1	Bolt hole ℓ2	Bolt hole d	Bolt hole t	Installation bolts	Tap N	Tap hole M × ℓ	No. of bolt holes
TBS	12	15	1 3 5	7	5	23	7	14	-	-	-	-	M3 bolt	M3	M3 × 6	1 (Tap hole)
		20														
	16	20		9	7								M4 bolt	M4	M4 × 6	1 (Tap hole)
		25														
	20	20		12							6.5	3.5	M3 bolt	M4	-	1
		25														
		30							7.5	15						2
		40							10	20						
	25	20		15	8	28	9	17	-	-	8	5	M4 bolt	M5		1
		25														
		30							7.5	15						2
		40							10	20						
	30	25		17		32	10	20	-	-	9	6	M5 bolt	M6		1
		30							7.5	15						2
		40							10	20						
	35	30		20	10	35	11	22	7.5	15						
		40							10	20	11	7	M6 bolt	M8		
		50								30						
	45	40		25	15	45	14	29		20						
		50								30						
		75	3 5						17.5	40						
		100							20	60						
	65	60		35	20	60	19	39	15	30	14	9	M8 bolt	M10		
		90							20	50						
		120							30	60						

MTS MASTER TECH & SYSTEMS
MasterTech @mts-th
www.mastertechandsystems.com
02-756-0000

Taper Block Sets
ชุดเทเปอร์บล็อค (TBSF)

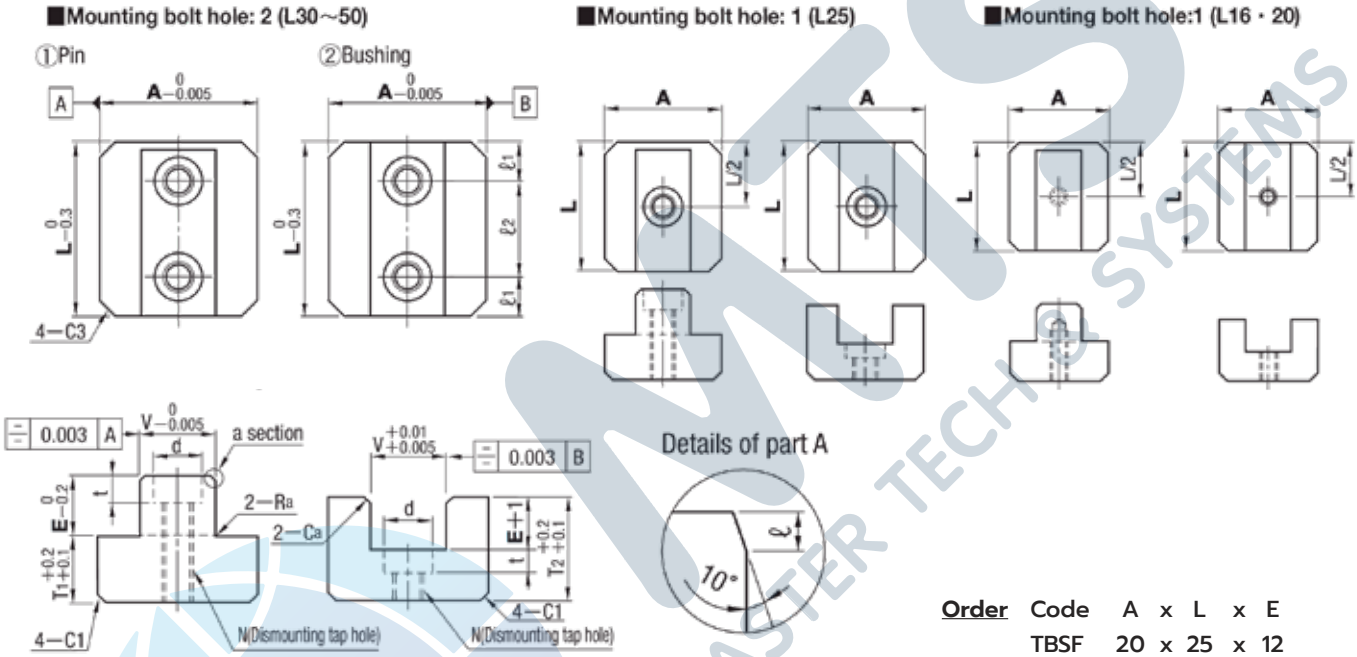

Order Code A x L x E
TBSF 20 x 25 x 12

Code	T V ① Pin	T V ② Bushing	Positioning precision (Clearance)	V dimension symmetry against A/B plane	Material	Hardness
TBSF	0 -0.005	+0.01 +0.005	0.005 - 0.015	0.003 or less	SKD11	58 - 62 HRC

Code	A	L Selection	E	V	T	T1	T2	ℓ	Ra	Ca	Bolt hole ℓ1	Bolt hole ℓ2	Bolt hole d	Bolt hole t	Installation bolts	Tap N	No. of bolt holes
TBSF	16	16	8	9	26	8	17	1	0.5	0.5	-	-	-	-	M4 bolt	M4	1 (Tap hole)
			12		30		21										
		20	8		26		17										1 (Tap hole)
			12		30		21										
	20	25	8	12	26		17						6.5	3.5	M3 bolt		1
			12		30		21										
		30	8		26		17				7.5	15					2
			12		30		21										
	25	25	10	15	32	10	21	1	0.5	0.5	-	-	8	5	M4 bolt	M5	1
			15		37		26	2	1	1							
		30	10		32		21	1	0.5	0.5	7.5	15					2
			15		37		26	2	1	1							
	30	30	12	17	36	12	23	1	0.5	0.5			9.5	6	M5 bolt	M6	
			20		44		31	2	1	1							
		40	12		36		23	1	0.5	0.5	10	20					
			20		44		31	2	1	1							
	35	40	15	20	41		28	2	1	1			11	7	M6 bolt	M8	
			25		51		38										
		50	15		41		28					30					
			25		51		38										

Tapered Block Sets
ชุดเทเปอร์บล็อค (S02)

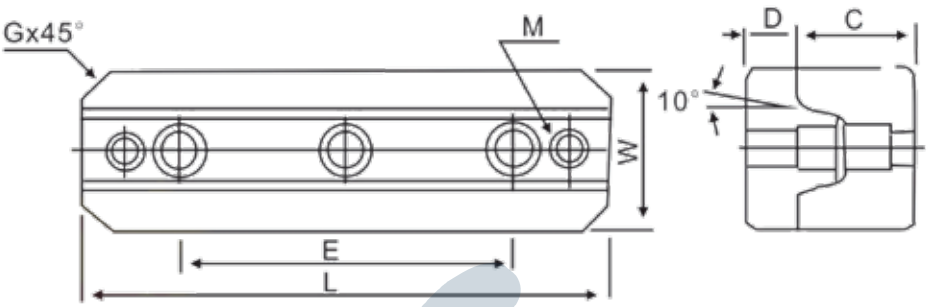

Code	S02
Material	YK30
Hardness	58 HRC ~

Order Code
S02-50

Code	E	L	W	D	C	G	M
S02-50	-	50	25	8	17.5	5	M5
S02-100	60	100	30	10	22	5	M6
S02-150	100	150	40	13	25	5	M8

Side Locks ตัวล็อคตำแหน่งแม่พิมพ์ (PL)

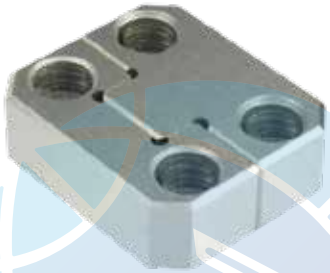

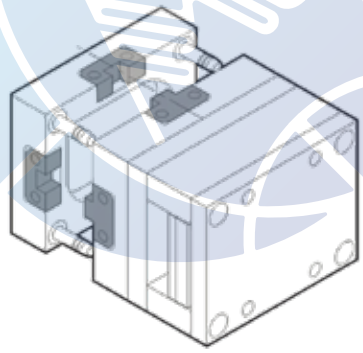

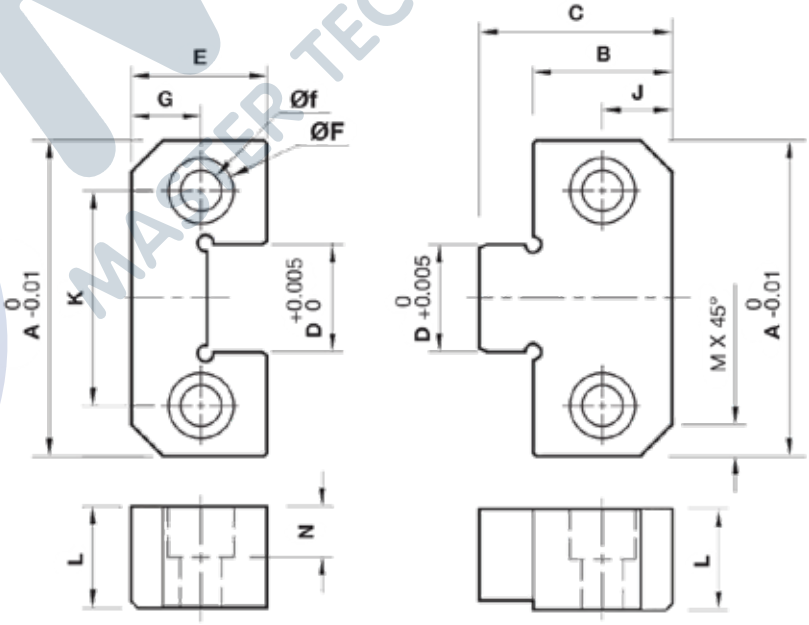

Order Code
PL-38

Code	A	B	C	D	F	f	K	J	G	M	L	N	E
PL-38	38	22	30	12	10	6.5	22	7	7	5	13	8	22
PL-50	50	21.5		17	11	6.5	34	11	11		16		21.5
PL-75	75	36	50	25	17	11	50	18	18	8	19	12	36
PL-100	100	45	65	35			70	22	22	10			45
PL-125	125			45			84				25		

MTS MASTER TECH & SYSTEMS
MasterTech @mts-th
www.mastertechandsystems.com
02-756-0000

Side Straight Block Sets
ตัวล็อคตำแหน่งแม่พิมพ์ (TSSB)

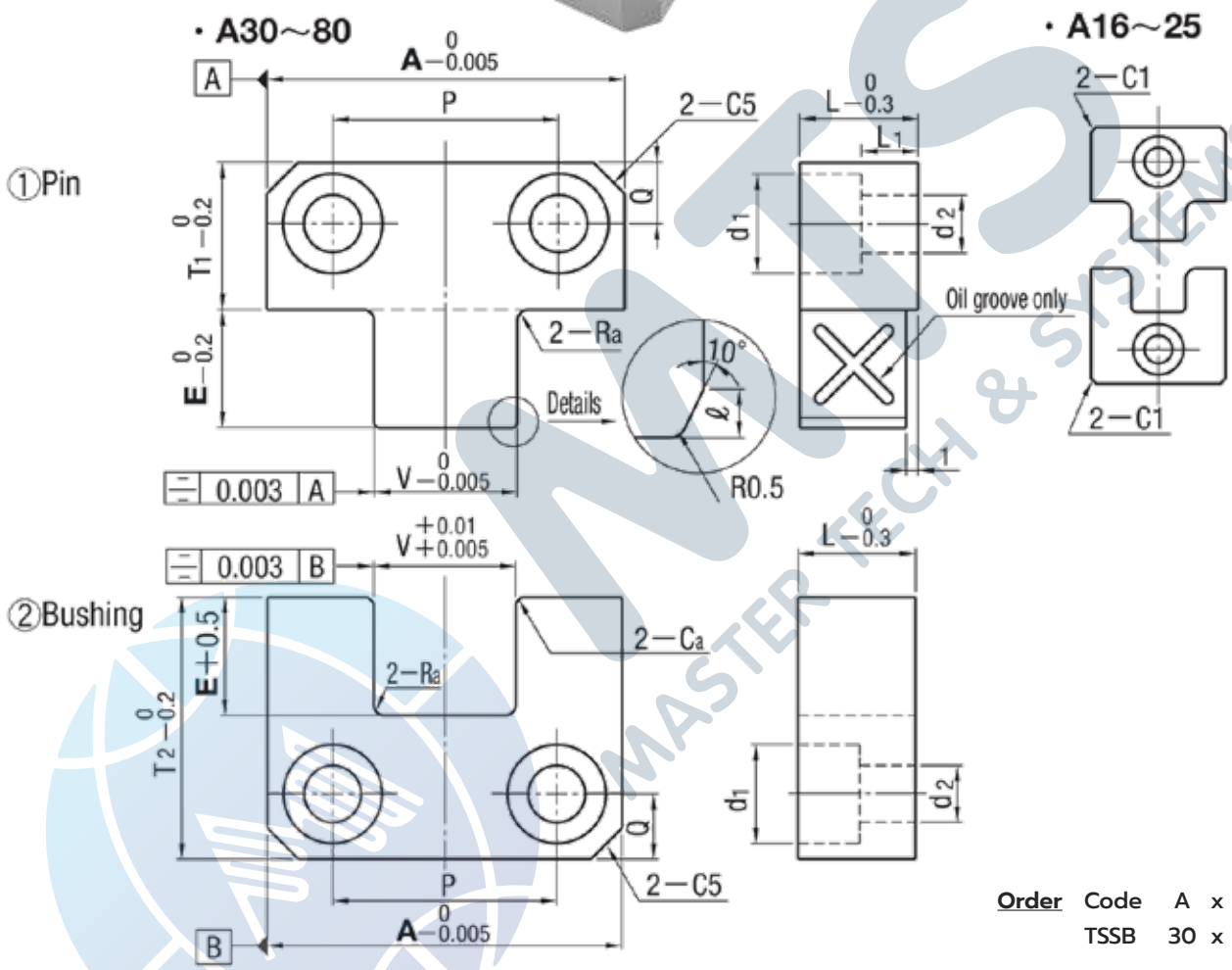

Order Code A x E
TSSB 30 x 8

Code	T V ① Pin	T V ② Bushing	Positioning precision (Clearance)	V dimension symmetry against A/B plane	Material	Hardness
TSSB	0 -0.005	+0.01 +0.005	0.005 - 0.015	0.003 or less	SKD11	58 - 62 HRC

Code	A	E	V	T_1	T_2	ℓ	Ra	Ca	Bolt hole P	Bolt hole Q	Bolt hole d_1	Bolt hole d_2	Installation bolts	L	L_1
TSSB	16	6	7	11	17	1	1	0.5	-	5	8	4.5	M4 bolt	8	3
	20	6	8												
	25	8	10		19										
	30	8	12	14	22	1	1	0.5	16	6	9.5	5.5	M5 bolt	10	4
		20			34	2	2	1							
	40	10	15	18	28	1	1	0.5	22	7	11	6.6	M6 bolt	13	6
		25			43	2	2	1							
	60	20	25	30	50	2	2	1	36	12	14	8.6	M8 bolt	20	11
		35			65										
	80	30	30	40	70				52	14	18	11	M10 bolt	25	14
		45			85										

Side Straight Block Sets - Tin Coating
ตัวล็อคตำแหน่งแม่พิมพ์ (TSSBN)

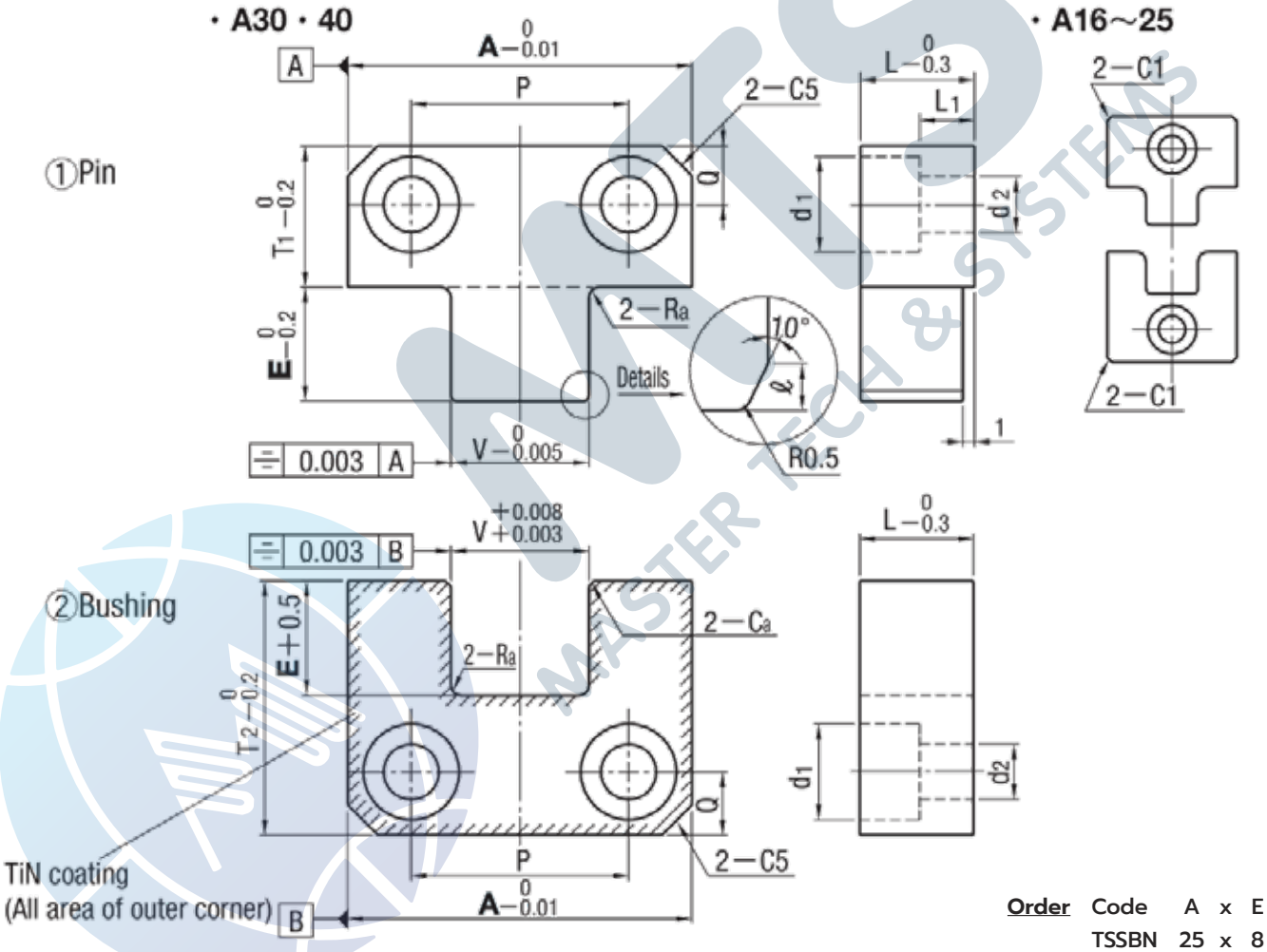

Order Code A x E
TSSBN 25 x 8

Code	V ① Pin	V ② Bushing	Positioning precision (Clearance)	V dimension symmetry against A/B plane	Material	Hardness
TSSBN	0 -0.005	+0.008 +0.002	0.003 - 0.013	0.003 or less	① SKD11 ② SKD11 - TiN coating	① 53 - 56 HRC ② 53 - 56 HRC 2000 HV~

Code	A	E	V	T1	T2	ℓ	Ra	Ca	Bolt hole P	Bolt hole Q	Bolt hole d1	Bolt hole d2	Installation bolts	L	L1
TSSBN	16	6	7	11	17	1	1	0.5	-	5	8	4.5	M4 bolt	8	3
	20	6	8												
	25	8	10		19										
	30	8	12	14	22				16	6	9.5	5.5	M5 bolt	10	4
	40	10	15	18	28				22	7	11	6.6	M6 bolt	13	6

MTS MASTER TECH & SYSTEMS
MasterTech @mts-th
www.mastertechandsystems.com
02-756-0000

Positioning Straight Block Sets
ตัวล็อคตำแหน่งแม่พิมพ์ (TTSB)

● A20 · 25 · 30

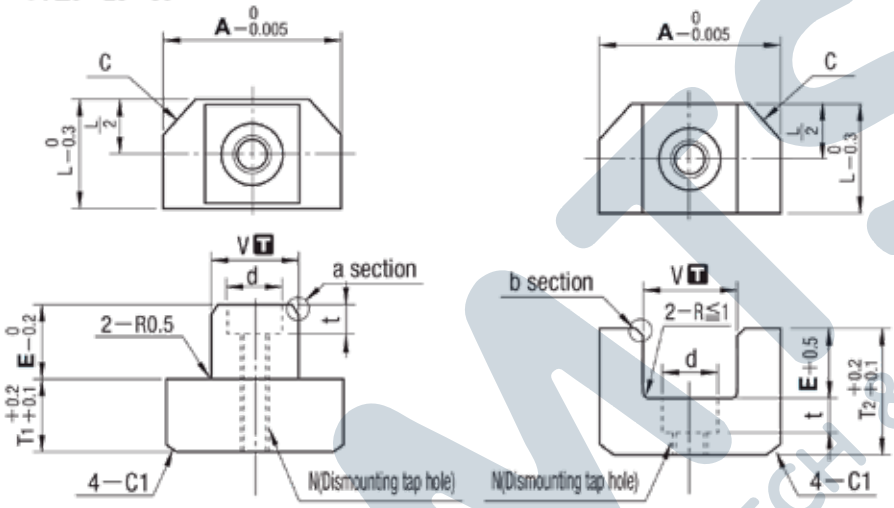

● A40 · 50

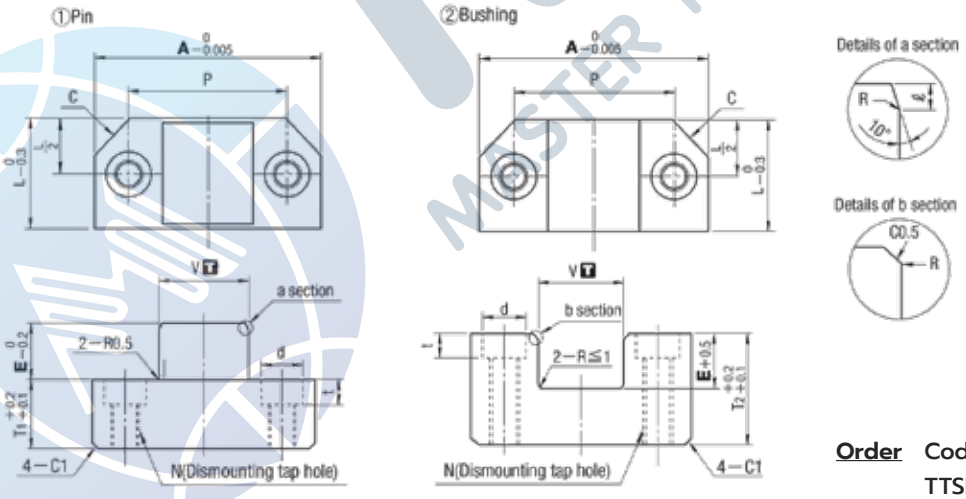

Order Code A x E
TTSB 25 x 8

Code	T V ① Pin	T V ② Bushing	Positioning precision (Clearance)	V dimension symmetry against A/B plane	Material	Hardness
TTSB	0 -0.005	+0.01 +0.005	0.005 - 0.015	0.003 or less	SKD11	58 - 62 HRC

Code	A	E	L	T	T1	T2	V	ℓ	C	P	Bolt hole d	Bolt hole t	Installation bolts	Tap N
TTSB	20	6	12	23	8	14	10	0.5	4	-	6.5	3.5	M3 bolt	M4
	25	8	15	28	10	17	12	1			8	4.5	M4 bolt	M5
	30	8							6					
	40	10	20	32	12	19	15			28				
		15		43	17	25		2						
	50	15	25	46		28	20			35	9.5	5.5	M5 bolt	M6

Positioning Block Sets
ตัวล็อคตำแหน่งแม่พิมพ์ (LBJX)

Code	LBJX
Material	SKD11
Hardness	58 - 62 HRC

Order

Code	A	x	T1
LBJX	30	x	19

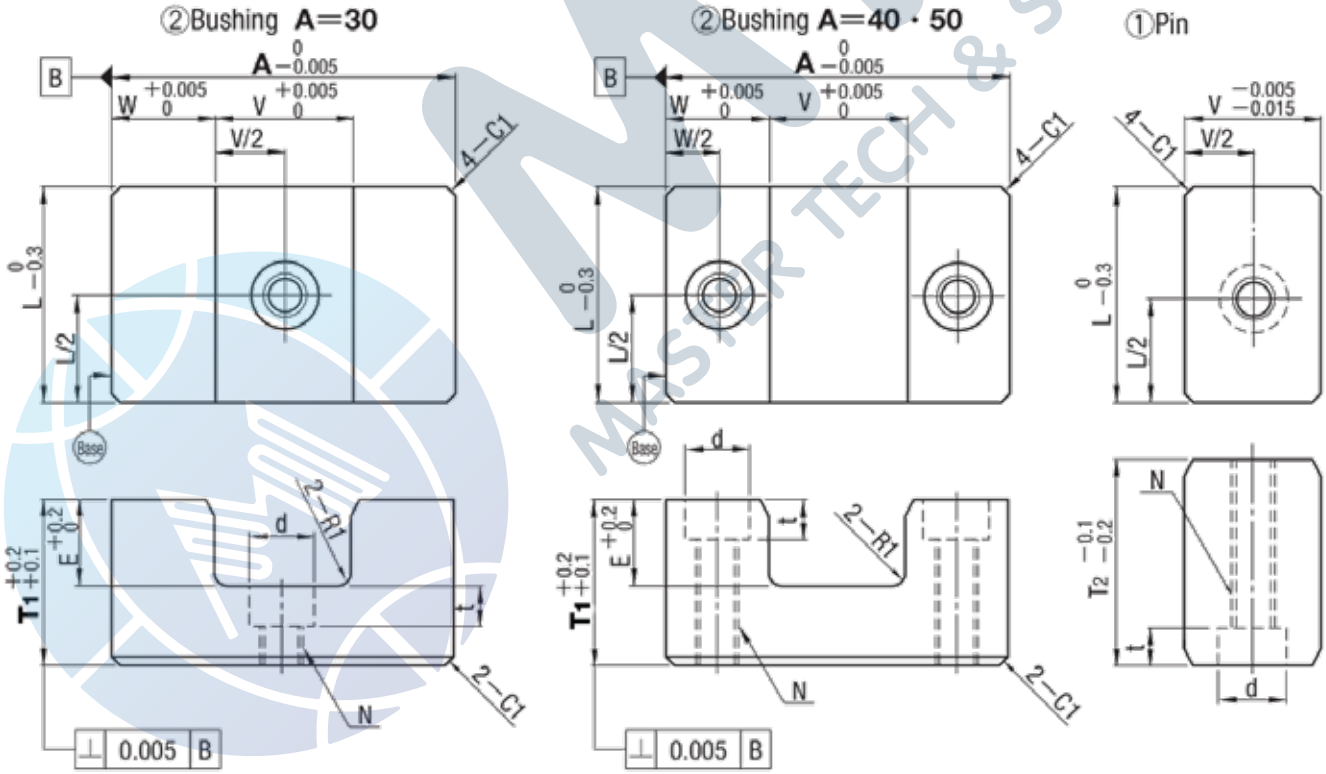

Code	A	T1	W	V	E	T2	d	t	Installation bolts	Tap N	L
LBJX	30	14	9	12	6	18	8	4.5	M4	M5	20
		19									
	40	19	12	16	10	25					25
		24									
	50	29	15	20	15	35	11	6.5	M6	M8	30
		34									

MTS MASTER TECH & SYSTEMS
MasterTech @mts-th
www.mastertechandsystems.com
02-756-0000

Roller Lock Sets
ชุดล็อกโรลเลอร์ (MPLK)

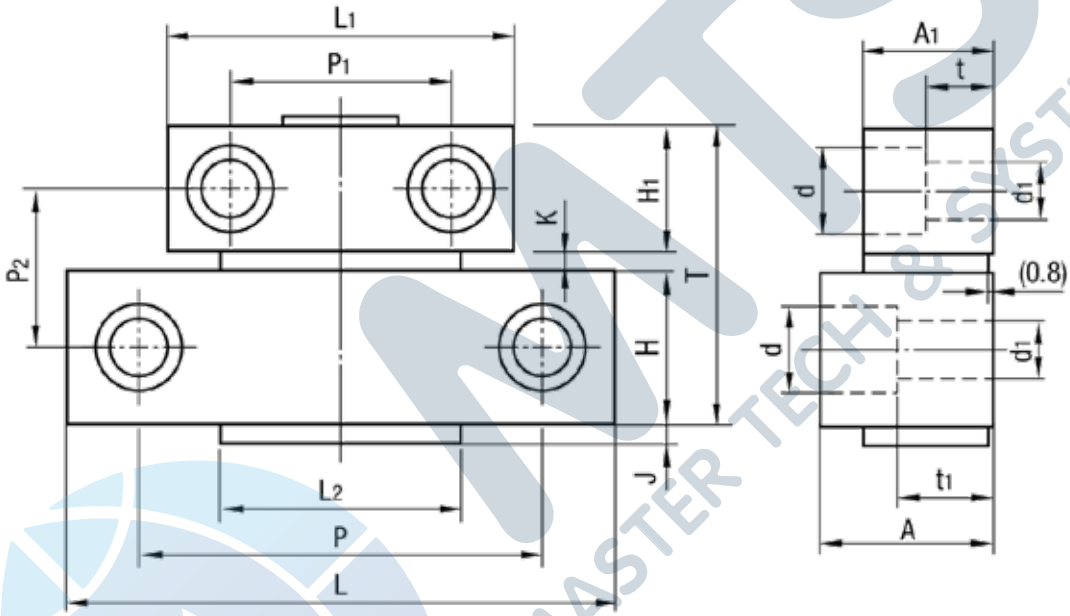

* Use under temperature 80°

Code	MPLK
Material	S50C + SK3

Order	Code	No.
	MPLK	60

Standard type

Code	No.	Max. usable load (2 sets under normal temp)	L	L1	L2	T	H	H1	J	K	P	P1	P2	A	A1	t	t1	d	d1	A 2 pcs. Each
MPLK	10	981N {100kgf}	48	36	25	42	22	18	2	2	36	24	22	24	16	9.5	18	11	6.5	CB6 - 20 CB6 - 30
	20	1961N {200kgf}	54	42							40	28				9	16			CB6 - 20 CB6 - 25
	30	2942N {300kgf}	65	46	35	48.5	25	20	3.5	3.5	50	31	26	27	19	9.5	17		6.5	CB6 - 30 CB6 - 35
	60	5884N {600kgf}	73	50							52	33						14	9	CB8 - 30 CB8 - 35
	80S	7845N {800kgf}				56.5				11.5			34							
	100	9807N {1000kgf}	103	65	48	58	30	24	4	4	76	42	31	34	25	13	19	17	11	CB10 - 30 CB10 - 35

Long type

Code	No.	Max. usable load (2 sets under normal temp)	L	L1	L2	T	H	H1	J	K	P	P1	P2	A	A1	t	t1	d	d1	A 2 pcs. Each
MPLK	60L	5884N {600kgf}	73	50	35	79.5	25	20	3.5	34.5	52	33	57	27	19	9.5	17	14	9	CB8 - 30 CB8 - 35
	80	7845N {800kgf}				87.5				42.5			65							
	100L	9807N {1000kgf}	103	65	48	89	30	24	4	35	76	42	62	34	25	13	19	17	11	CB10 - 30 CB10 - 35

Magnet Lock Sets
ชุดล็อคแม่เหล็ก (MLK)

Code	MLK
Material	SS400 + Magnet

Order Code No.
MLK 60

● Holder

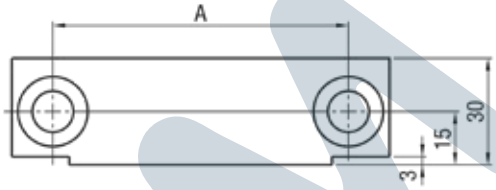

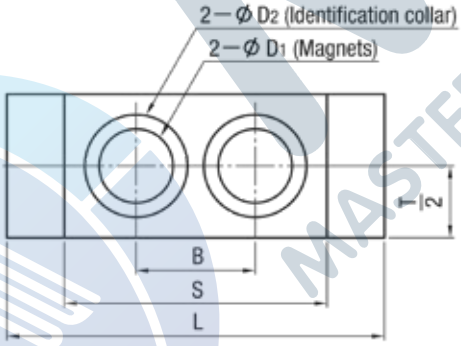

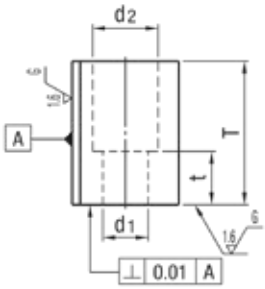

● Block

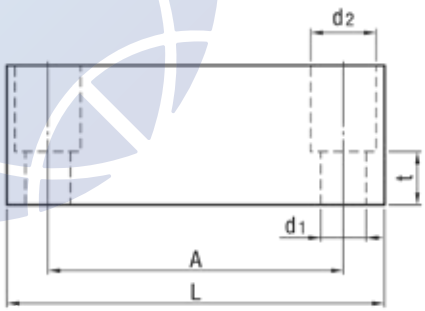

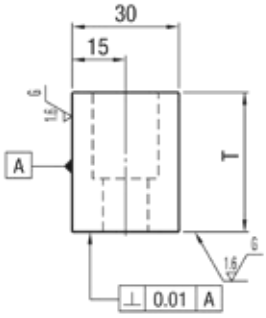

Code	Adhesion strength (per set under 20°C)	A	B	S	L	T	t	D1	D2	Identification collar	d1	d2	Accessories
MLK 40	392.3N {40kgf}	63	25	60	80	25	12	18	22	Gold (Brass)	9	14	CB8 - 25 4pcs. Spring washers 4pcs.
MLK 80	784.5N {80kgf}									Silver (Aluminum)			
MLK 100	980.7N {100kgf}	100	39	79	126	40	15	30	34	Gold (Brass)	11	18	CB10 - 30 4pcs. Spring washers 4pcs.
MLK 200	1961.3N {200kgf}									Silver (Aluminum)			

MTS MASTER TECH & SYSTEMS
MasterTech @mts-th
www.mastertechandsystems.com
02-756-0000

Parting Lock Sets
ชุดพาร์ทติ้งล็อค (PLS / PLM /PLL)

Order Code
PLS

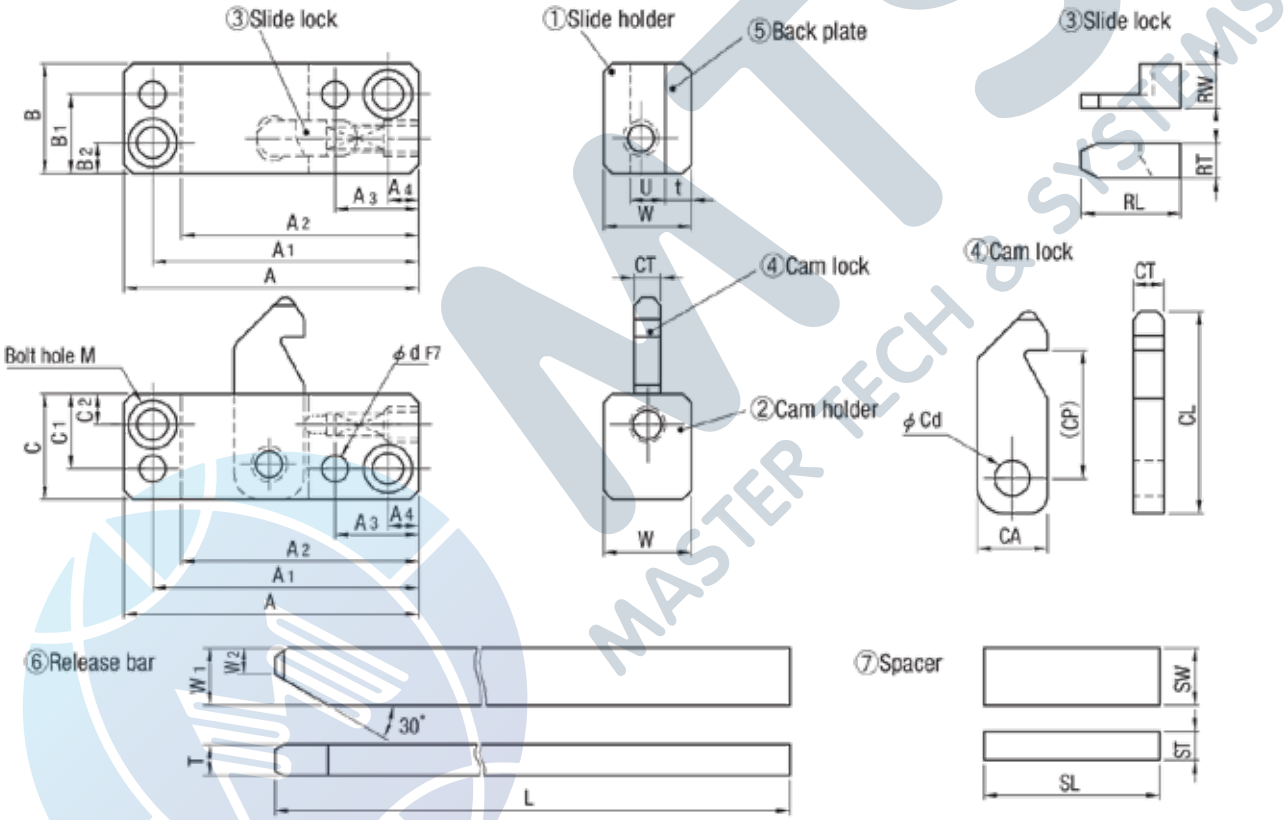

Item	① Slide holder	② Cam holder	③ Slide lock	④ Cam lock	⑤ Back plate	⑥ Release bar	⑦ Spacer
Material	SKD61	SKD61	SKD11	SKD11	SK	S45C	S45C
Hardness	50 - 55 HRC	50 - 55 HRC	58 HRC ~	58 HRC ~	50 HRC ~	45 HRC ~ (Induction hardening)	-

Code	① Slide holder ② Cam holder															③ Slide lock		
	A	A_1	A_2	A_3	A_4	B	B_1	B_2	C	C_1	C_2	W	U	Bolt hole M	d	RL	RT	RW
PLS	68	61.5	55	19	7	26	19	7	24	17	7	20	8	For M6	ϕ6	18	7	11
PLM	88	79	70	24	9	38	29	9	30	21	9	30	12	For M8	ϕ8	20	9	16
PLL	104	93	82	27	11	48	37	11	38	27	11	45	20	For M10	ϕ10	24	12	26

Code	④ Cam lock					⑤	⑥ Release bar				⑦ Spacer			Accessories		
	CL	CP	CA	CT	Cd	t	W_1	W_2	T	L	SW	ST	SL	Bolt 4 pcs.	Dowel pin 4 pcs.	Spring 2 pcs.
PLS	45	28	16	7.5	8	6	13	5.9	7	250	13	6.5	40	CB6 - 25	MSTM6 - 30	WHH6 - 15
PLM	64	41	20	10	10	7	16	8	10	300	16	8	50	CB8 - 35	MSTM8 - 40	WHH8 - 20
PLL	84	53.5	25	18	13	8	20	9.5	15.5	350	20	10.2	55	CB10 - 50	MSTM10 - 50	WHH8 - 20

Parting Locks
พาร์ทติ้งล็อค (PL / PLO)

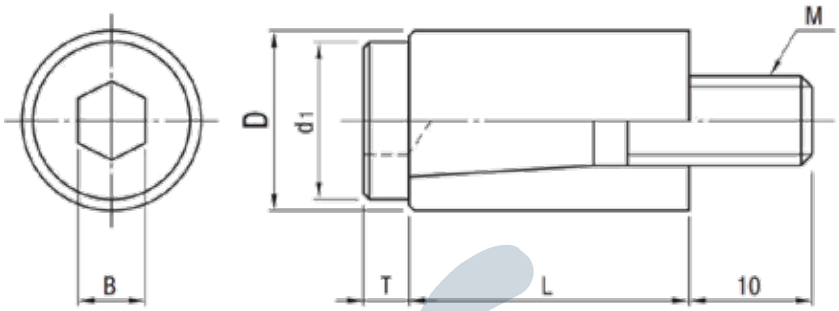

Code	PL (Yellow) PLO (Orange)
Material	SCM435 + Resin

Order Code D
PL 16

Code	D	d1	M	B	L	T	Color	Qty / Box
PL	10	8.5	5	4	18	3	Yellow	12
	12	11	6	5	20	3.5		12
	13	11	6	5	21	3.5		12
	16	14	8	6	26	4.5		12
	20	16	10	8	31	5		10
PLO	13	11	6	5	21	3.5	Orange	12
	16	14	8	6	26	4.5		12
	20	16	10	8	31	5		10

Air Jet Valves ตัวระบายอากาศ (AJV)

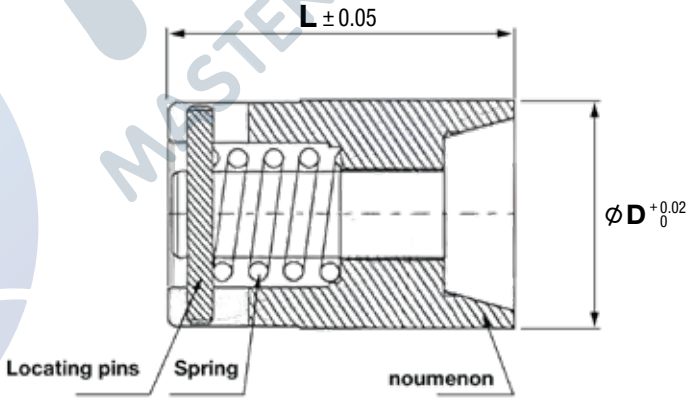

Code	AJV
Material	SUS420

Order Code D x L
AJV 16 x 30

Code	D	L
AJV	5	12
	6	12
	8	12 15
	10	12 15 20
	12	12 15 20 25
	16	20 25 30
	20	20 30 35
	25	30
	30	30

MTS MASTER TECH & SYSTEMS
MasterTech @mts-th
www.mastertechandsystems.com
02-756-0000

Cooling Plugs
ตัวอุดรูน้ำ (CL)

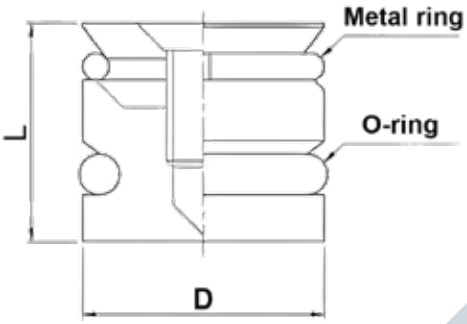

Code	D	L
CL	6	10
	8	10
	10	11
	12	12
	14	13
	16	14
	20	18
	25	19
	30	19

Code	CL
Material	Brass

Order	Code	D
	CL	12

Cooling Plugs ตัวอุดรูน้ำ (JWP)

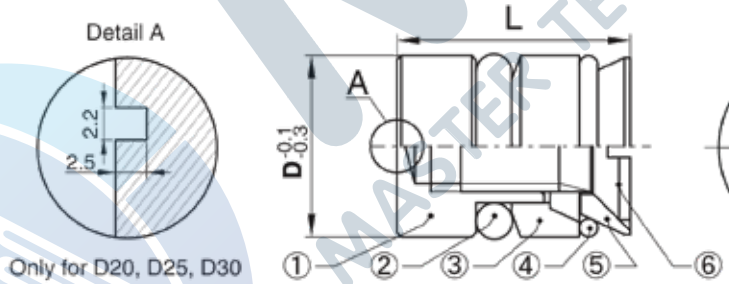

Code	JWP
Material	Brass

Order	Code	D
	JWP	8

Code	D	L
JWP	6	10
	8	
	8.5	
	10	
	11.5	
	12	
	14	12

Item	① Body	② O-rings	③ Spacer	④ Metal ring	⑤ Tapered washer	⑥ Screw
Material	Brass (C3604)	Fluoric rubber	Brass (C3604)	-	Brass (C3604)	Brass (C3604)

Date Inserts
ตัวชี้บอกวันที่ (DM□, DT□, DT□X)

DM□ แบบถอดไส้ไม่ได้

Material SUS420
45-50 HRC

Order Code D x L
DMS 6 x 10

Code	D	L
DMB	3	6
		8
DM	4	6
		8
DMS	5	8
DMD	6	8
		10
DMF	8	10
DME	10	10
		12
DMN	12	12
		14
	16	14
	20	16

DT□ แบบถอดไส้ได้

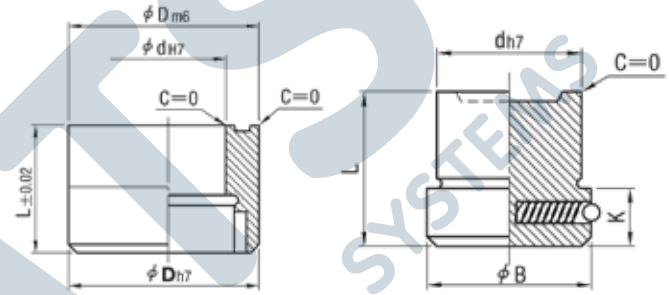

Order Code D
DTD 10

Material SUS420
45-50 HRC

Code	D	Dm6	Dh7	L	d	dH7	B	K
DTBB	3	+0.008 +0.002	0 -0.010	8	1.4	+0.010 0	2	3
DT	4	+0.012 +0.004	0 -0.012	8	1.9		2.8	3
DTS	5			8	2.3		3.4	4
	6			8	2.8		4	4
DTD	8	+0.015	0	10	4	+0.012	5.6	4
DTF	10	+0.006	-0.015	12	5	0	6.5	6
DTE	16	+0.018 +0.007	0 -0.018	14	10	+0.015 0	12	6
DTN	20	+0.021 +0.008	0 -0.021	16	12	+0.018 0	14	6

DT□X แบบถอดไส้ได้

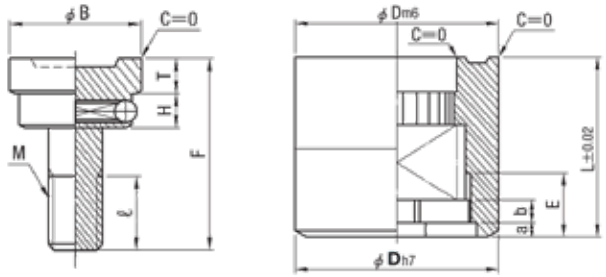

Order Code D
DTBX 12

Material SUS420
45-50 HRC

Code	D	Dm6	Dh7	L	E	a	b	F	T	H	B	ℓ	M X P
DTBX	4	+0.012 +0.004	0 -0.012	8	2.8	1.0	1.2	7.7	1.5	3.0	2.4	2.7	M1.6 X 0.20
DTX	5			8	2.85						2.9		
DTXS	6			8	2.9						3.7		
DTDX	8	+0.015	0	10	3.4		1.5	9.7	2.0	3.5	5.0	3.2	M2.3 X 0.25
DTFX	10	+0.006	-0.015	12	4.2			11.7	2.5	4.0	6.3	4.0	M2.5 X 0.35
DTEX	12	+0.018	0	14	4.4	1.2		13.7		4.3	7.5	4.2	M3.0 X 0.35
DTNX	16	+0.007	-0.018	14	5.0	1.4	1.8				11.0	4.8	M4.0 X 0.35
	20	+0.021 +0.008	0 -0.021	16	5.3	1.5	2.0	15.7	3.5	5.0	13.2	5.3	

Type	Year + Month	4 Year	6 Year	Month	Days (0-3)	Days (0-9)	Blank
	DMB	DM	DMS	DMD	DMF	DME	DMN
	DTBB	DT	DTS	DTD	DTF	DTE	DTN
	DTBX	DTX	DTXS	DTDX	DTFX	DTEX	DTNX

MTS MASTER TECH & SYSTEMS
MasterTech @mts-th
www.mastertechandsystems.com
02-756-0000

Date Insert
ตัวชี้บอกวันที่ (DTBZ / DTEZ)

Material SUS420
45-50 HRC

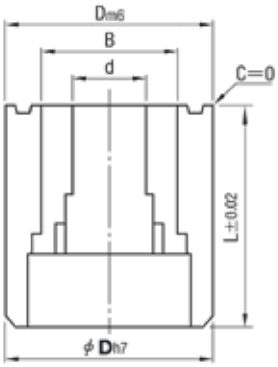

D	Dm6	Dh7	L	B	d
6	+0.012 +0.004	0 -0.012	10	3.8	1.8
8	+0.015 +0.006	0 -0.015		5.3	2.5
10	+0.015 +0.006	0 -0.015	12	6.4	3.2
16	+0.018 +0.007	0 -0.018	14	10.2	5.0

Code	Year + Month	D	Year
DTBZ		6	26 (for 2026) 27 (for 2027) 28 (for 2028)
		8	
		10	
		16	

Code	Day	D
DTEZ		6
		8
		10
		16

Order	Code	D	x	Year
	DTBZ	6	x	26
	DTEZ	8		

Recycle Mark ตัวชี้บอกเครื่องหมายรีไซเคิล (RM□□)

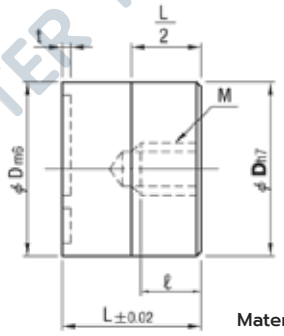

Material SUS420
45-50 HRC

Code	D	L	M	ℓ	A	t
RM1J RM1E RM2J RM2E RM3J RM3E RM4J RM4G RM5J RM4F RM6J RM7E RM7J	8	10	M4	5	5	0.2
	10	12	M5	7	6	0.3
	16	14	M6	7	10	0.3
	20	16	M6	8	12	0.3

Order	Code	D
	RM1E	10

Applicable Plastics	Polyethylene terephthalate	High density Polyethylene	Polyvinyl chloride	Low density Polyethylene		Polypropylene	Polystyrene	Others
US SPI standard	RM1J	RM2J	RM3J	RM4J		RM5J	RM6J	RM7J
German and French standards comparable to US SPI standard	RM1E	RM2E	RM3E	RM4G (Germany)	RM4F (France)	RM5J	RM6J	RM7E

Mold Shot Counters
ตัวนับจำนวนแม่พิมพ์

M-CVPL

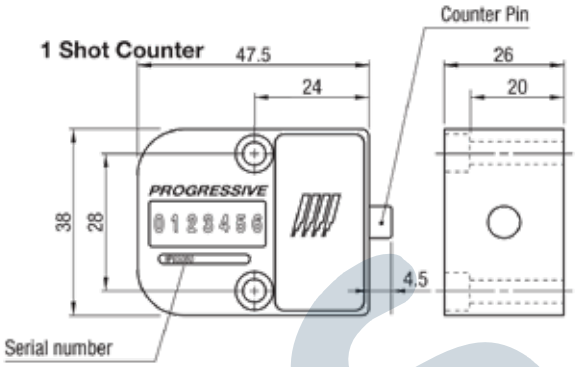

M-CVR

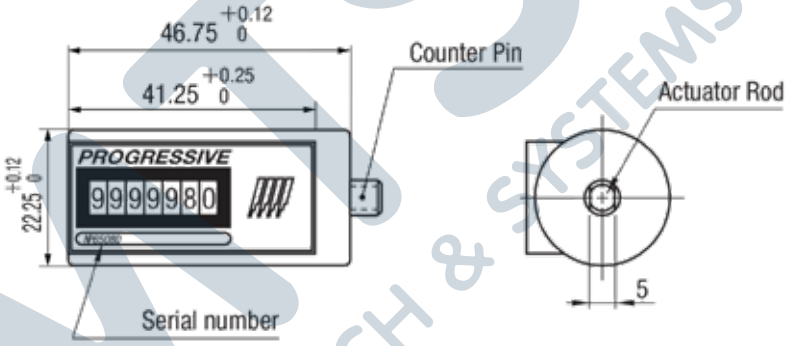

M-RCC

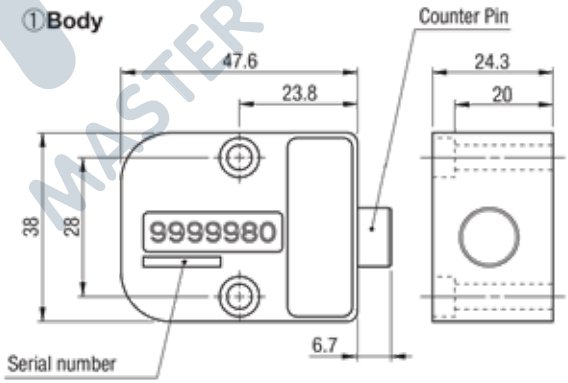

M-RCCB

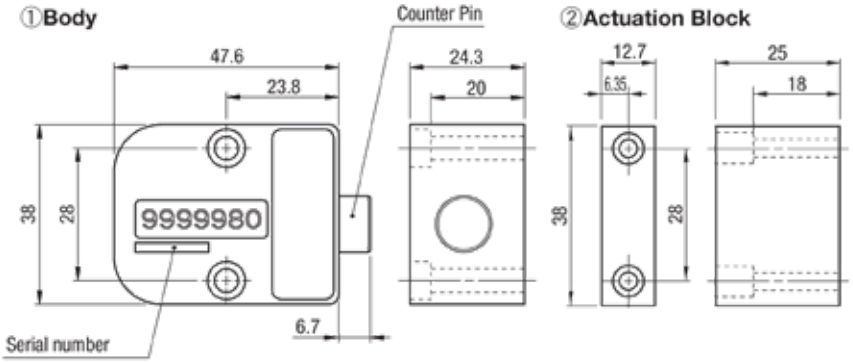

MTS MASTER TECH & SYSTEMS
MasterTech @mts-th
www.mastertechandsystems.com
02-756-0000

Shim Plates
แผ่นชิม (CS / SS)

Code	CS
Material	Carbon Steel

Code	SS
Material	Stainless Steel SUS304

Code	Thickness	Width x Length		
		12.7mm 1m	12.7mm 2m	50mm 5m
CS	0.02		•	
	0.03		•	•
	0.04		•	•
	0.05		•	•
	0.06		•	•
	0.07		•	•
	0.08		•	•
	0.09		•	•
	0.10		•	•
	0.12		•	•
	0.15		•	•
	0.18		•	•
	0.20		•	•
	0.25		•	•
	0.30		•	•
	0.40		•	•
	0.50		•	•
	0.60		•	•
	0.70		•	•
	0.80		•	•
	0.90		•	•
	1.00		•	•
	1.50	•		
	2.00	•		

Code	Thickness	Width x Length						
		12.7mm 2m	12.7mm 5m	50mm 3m	50mm 5m	100mm 5m	150mm 1m	300mm 1m
SS	0.005	•	•		•			
	0.01	•	•		•	•		
	0.02	•	•		•	•	•	•
	0.03		•		•	•	•	•
	0.04		•		•	•	•	•
	0.05		•		•	•	•	•
	0.06		•		•	•		
	0.07		•		•	•		
	0.08		•		•	•		•
	0.09		•		•	•		
	0.10		•		•	•	•	•
	0.12		•		•			
	0.15		•		•	•		•
	0.20		•		•	•	•	•
	0.25		•		•	•		•
	0.30		•	•	•	•	•	•
	0.35		•	•				
	0.40		•	•		•	•	•
	0.50		•	•	•	•	•	•
	0.60		•	•		•	•	•
	0.70		•	•		•		•
	0.80		•	•		•	•	•
	0.90		•	•		•	•	
	1.00		•	•		•	•	•
	1.20						•	
	1.50						•	
	2.00						•	•

MTS MASTER TECH & SYSTEMS

Fitting Joints
ข้อต่อตรง (PC)

Code	PC
Material	Resin, Brass

Order Code Size
PC 4 - 01

Code	เกลียว R(PT)	ขนาดสายลม (D)				
		Ø4	Ø6	Ø8	Ø10	Ø12
PC	M5	PL4-M5	PL6-M5	-	-	-
	1/8"	PL4-01	PL6-01	PL8-01	PL10-01	PL12-01
	1/4"	PL4-02	PL6-02	PL8-02	PL10-02	PL12-02
	3/8"	-	PL6-03	PL8-03	PL10-03	PL12-03
	1/2"	-	PL6-04	PL8-04	PL10-04	PL12-04

Fitting Joints ข้อต่องอ (PL)

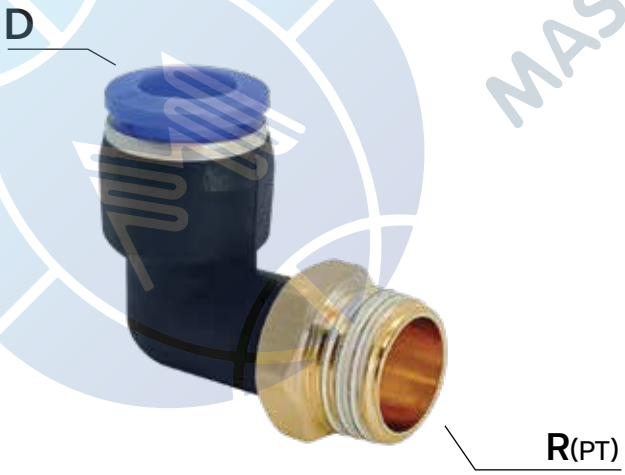

Code	PL
Material	Resin, Brass

Order Code Size
PL 4 - 01

Code	เกลียว R(PT)	ขนาดสายลม (D)				
		Ø4	Ø6	Ø8	Ø10	Ø12
PL	M5	PL4-M5	PL6-M5	-	-	-
	1/8"	PL4-01	PL6-01	PL8-01	PL10-01	PL12-01
	1/4"	PL4-02	PL6-02	PL8-02	PL10-02	PL12-02
	3/8"	-	PL6-03	PL8-03	PL10-03	PL12-03
	1/2"	-	PL6-04	PL8-04	PL10-04	PL12-04

Fitting Joints
ข้อต่อตรง (M-POC)

Code	M-POC
Material	Resin + Brass with Nickel plating

Order Code No.
M-POC 4 - 01

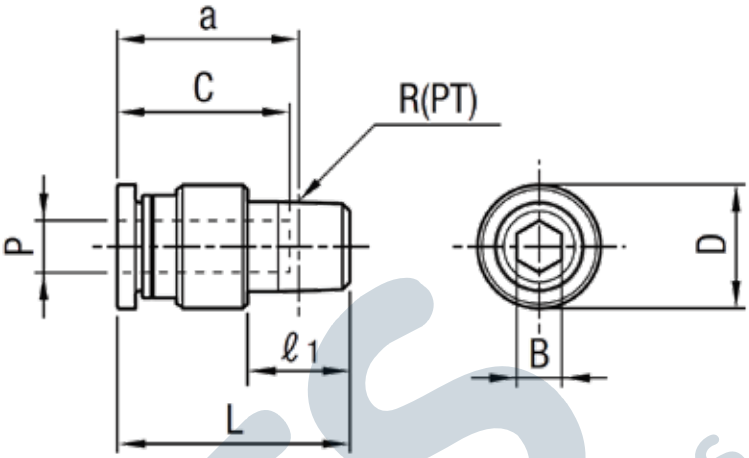

Code	No.	Matching tubes Outer x Inner dia.	R(PT)	D	⬡B	L	a	ℓ1	Tube inserting hole Hole dia. P	Depth C
M-POC	4-01	4 x 2.5	1/8	9.7	⬡2.5	20.0	16.0	8	4	14.9
	6-01	6 x 4		11.8	⬡4	22.1	18.1		6	17
	6-02		1/4	13.7		21.3	15.2	11		
	8-01	8 x 6	1/8	13.7	⬡5	25.9	21.9	8	8	18.2
	8-02		1/4		⬡6	25.1	19.1	11		
	8-03		3/8	16.8		22.2	15.9	12		
	10-02	10 x 7.5	1/4	17.5		29.8	23.8	11	10	20.7
	10-03		3/8			29.3	23.0	12		
	12-03	12 x 9		20.8	⬡8	31.9	25.6		12	23.3

Fitting Joints ข้อต่อตรง (M-POCL)

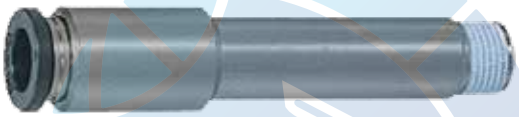

Code	M-POCL
Material	Resin + Brass with Nickel plating

Order Code No.
M-POCL 8-01-L50

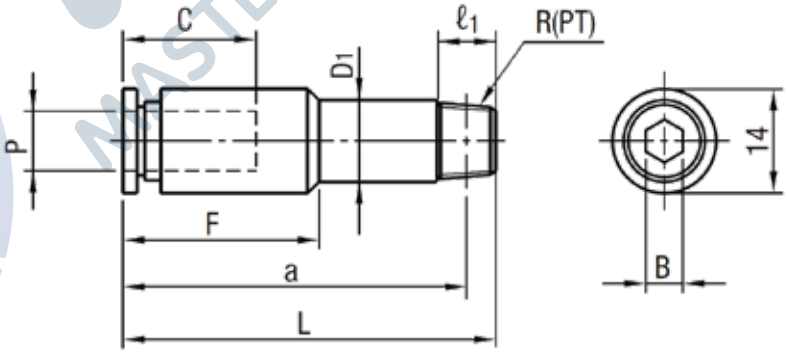

Code	No.	Matching tubes Outer x Inner dia.	R(PT)	⬡B	D1	L	a	F	ℓ1	Tube inserting hole Hole dia. P	Depth C
M-POCL	8-01-L 40	8 x 6	1/8	⬡5	11	48.5	44.5	26.5	8	8	18
	8-01-L 50					58.5	54.5				
	8-01-L 60					68.5	64.5				
	8-01-L 70					78.5	74.5				
	8-01-L 80					88.5	84.5				
	8-01-L 90					98.5	94.5				
	8-01-L 100					108.5	104.5				
	8-01-L 110					118.5	114.5				
	8-02-L 50		1/4		14	58.5	52.5	-	11		
	8-02-L 60					68.5	62.5				
	8-02-L 70					78.5	72.5				
	8-02-L 80					88.5	82.5				

Fitting Joints
ข้อต่อตรง (M-KC)

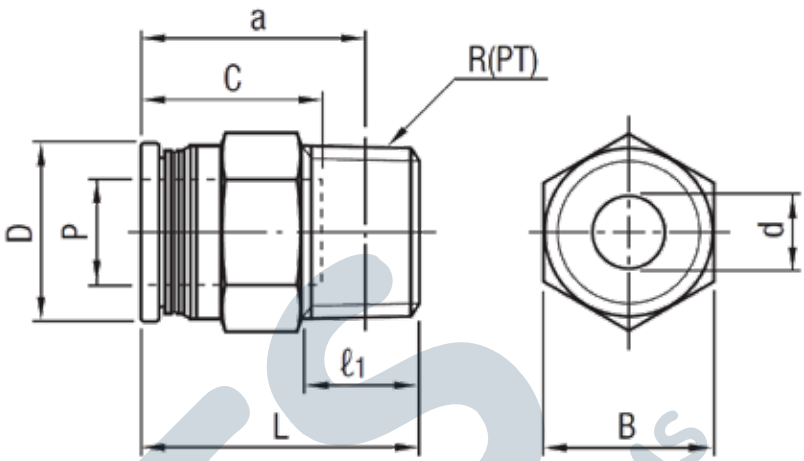

Code	M-KC
Material	Resin + Brass with Nickel plating

Order Code No.
M-KC 10-01-1

Code	No.	Matching tubes Outer x Inner dia.	R(PT)	D	d	L	a	B	ℓ1	Tube inserting hole Hole dia. P	Depth C
M-KC	4-01-1	4 x 2.5	1/8	9.4	2.5	20.6	16.6	10	8	4	14.5
	6-01-1	6 x 4		11.4	4	22.2	18.2	12		6	16.6
	6-02-1		1/4			26.2	20.1	14	11		
	8-01-1	8 x 6	1/8	13.4	6	27.4	23.4		8	8	17.7
	8-02-1		1/4			26.1	20.1		11		
	10-01-1	10 x 7.5	1/8	16.4	8	30.1	26.1	17	8	10	20
	10-02-1		1/4				24.1		11		
	10-03-1		3/8			28.6	22.3		12		
	12-02-1	12 x 9	1/4	19.4	8.5	35.2	29.2	21	11	12	22.6
	12-03-1		3/8		9	31.2	24.9		12		

Fitting Joints ข้อต่อตรง (M-KOC)

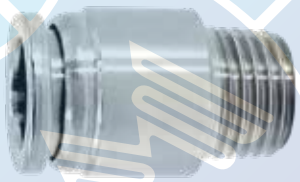

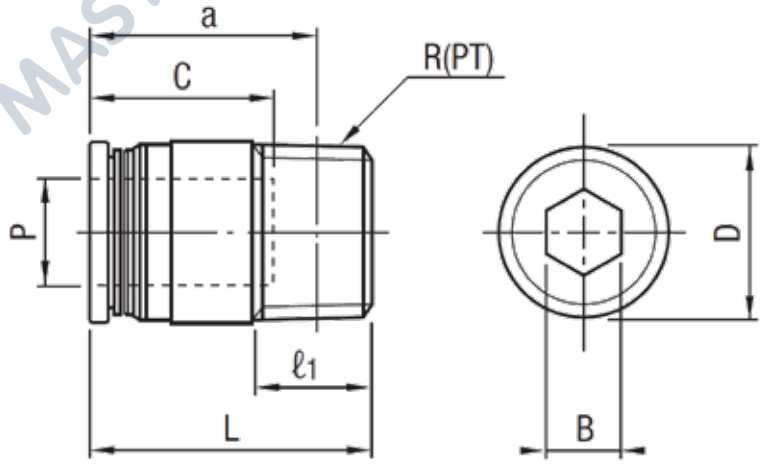

Code	M-KOC
Material	Resin + Brass with Nickel plating

Order Code No.
M-KOC 8-01-1

Code	No.	Matching tubes Outer x Inner dia.	R(PT)	D	L	a	B	ℓ1	Tube inserting hole Hole dia. P	Depth C
M-KOC	4-01-1	4 x 2.5	1/8	9.9	20.6	16.6	2.5	8	4	14.5
	6-01-1	6 x 4		11.9	22.2	18.2	4		6	16.6
	8-01-1	8 x 6		13.9	27.4	23.4	5		8	17.7
	8-02-1		1/4		26.1	20.1	6	11		
	10-01-1	10 x 7.5	1/8	16.9	30.1	26.1	5	8	10	20
	10-02-1		1/4		29.1	23.1	6	11		
	10-03-1		3/8		28.6	22.3		12		
	12-03-1	12 x 9		20.8	31.2	24.9	8		12	22.6

MTS MASTER TECH & SYSTEMS
MasterTech @mts-th
www.mastertechandsystems.com
02-756-0000

Fitting Joints
ข้อต่อตรง (M-120KC)

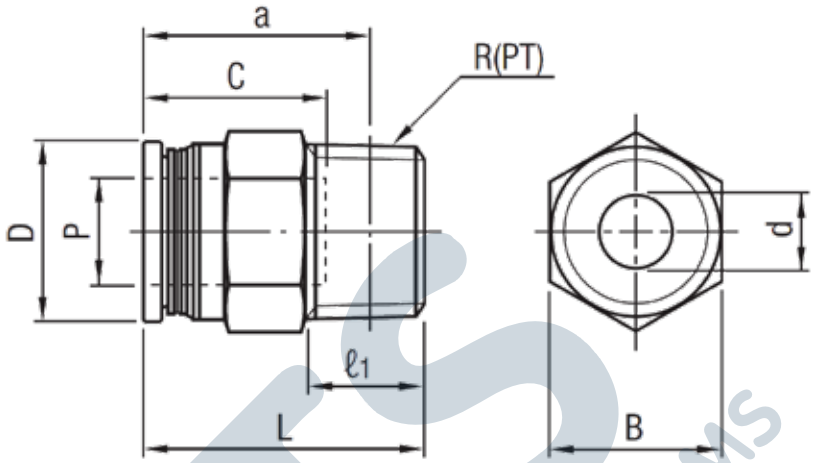

Code	M-120KC
Material	Resin + Brass with Nickel plating

Order Code No.
M-120KC 6-01-1-F

Code	No.	Matching tubes Outer x Inner dia.	R(PT)	D	d	L	a	B	ℓ1	Tube inserting hole Hole dia. P	Tube inserting hole Depth C
M-120KC	6-01-1-F	6 x 4	1/8	11.4	4	22.2	18.2	12	8	6	16.6
	8-01-1-F	8 x 6		13.4	6	27.4	23.4	14		8	17.7
	8-02-1-F		1/4			26.1	20.1		11		
	10-01-1-F	10 x 7.5	1/8	16.4		30.1	26.1	17	8	10	20
	10-02-1-F		1/4		8		24.1		11		
	10-03-1-F		3/8			28.6	22.3		12		
	12-02-1-F	12 x 9	1/4	19.4	8.5	35.2	29.2	21	11	12	22.6
	12-03-1-F		3/8		9	31.2	24.9		12		

Fitting Joints ข้อต่อตรง (M-120KOC)

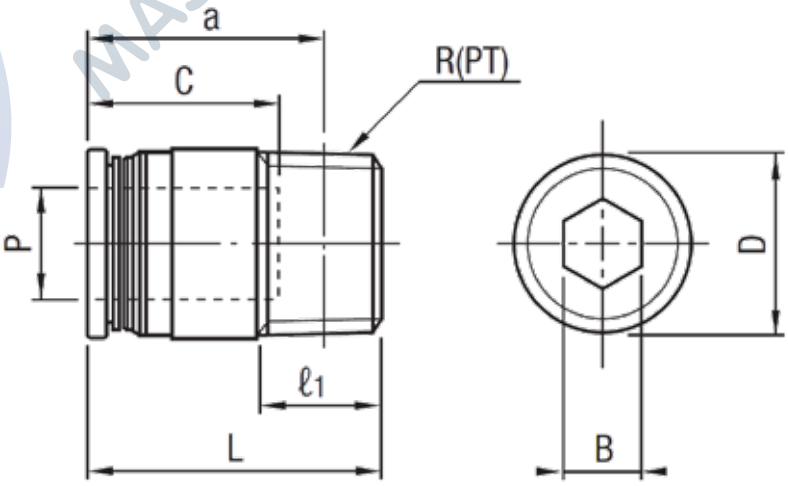

Code	M-120KOC
Material	Resin + Brass with Nickel plating

Order Code No.
M-120KOC 8-02-1-F

Code	No.	Matching tubes Outer x Inner dia.	R(PT)	D	L	a	B	ℓ1	Tube inserting hole Hole dia. P	Tube inserting hole Depth C
M-120KOC	6-01-1-F	6 x 4	1/8	11.9	22.2	18.2	4	8	6	16.6
	8-01-1-F	8 x 6		13.9	27.4	23.4	5		8	17.7
	8-02-1-F		1/4		26.1	20.1	6	11		
	10-02-1-F	10 x 7.5		16.9	29.1	23.1			10	20
	12-03-1-F	12 x 9	3/8	20.8	31.2	24.9	8	12	12	22.6

Fitting Joints
ข้อต่องอ (M-KL)

Code	M-KL
Material	Resin + Brass with Nickel plating

Order Code No.
M-KL 8-01-1

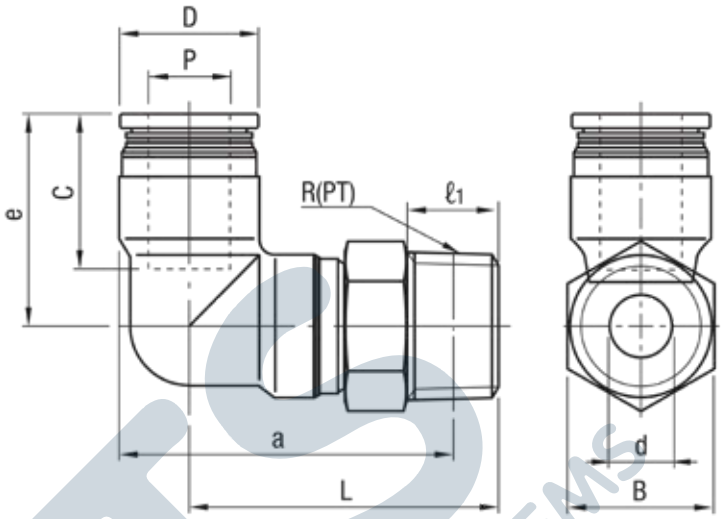

Code	No.	Matching tubes Outer x Inner dia.	R(PT)	D	d	L	a	e	B	ℓ1	Tube inserting hole Hole dia. P	Tube inserting hole Depth C
M-KL	4-01-1	4 x 2.5	1/8	10.5	2.5	22.8	24.1	17.6	10	8	4	14.5
	6-01-1	6 x 4		12.5	4	25	27.3	20.1	12		6	16.5
	8-01-1	8 x 6		14.5	6	28	31.3	22.3	14		8	17.7
	8-02-1		1/4			31	32.2			11		
	10-01-1	10 x 7.5	1/8	18.5		32.5	37.8	26.1	17	8	10	20
	10-02-1		1/4		8	35.5	38.7			11		
	10-03-1		3/8			36.5	39.4			12		
	12-02-1	12 x 9	1/4	21.5		37.5	42.2	29.7	21	11	12	22.6
	12-03-1		3/8		9	38.5	42.9			12		

Fitting Joints ข้อต่องอ (M-KH)

Code	M-KH
Material	Resin + Brass with Nickel plating

Order Code No.
M-KH 10-02-1

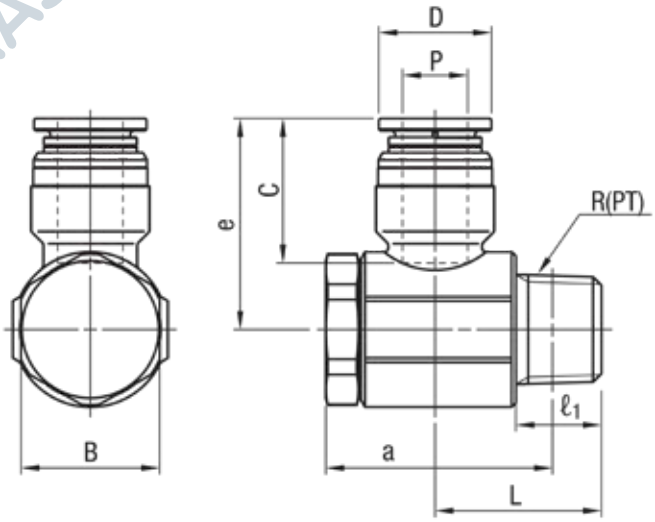

Code	No.	Matching tubes Outer x Inner dia.	R(PT)	D	Allen size B	L	a	e	ℓ1	Tube inserting hole Hole dia. P	Tube inserting hole Depth C
M-KH	6-01-1	6 x 4	1/8	12.5	14	15.6	23.8	23.2	8	6	16.5
	8-01-1	8 x 6	1/8	14.5	14	15.6	23.8	24.4	8	8	17.7
	8-02-1		1/4		17	20.4	28.3	25.9	11		
	10-02-1	10 x 7.5	1/4	18.5	17	20.4	28.3	28	11	10	20
	12-03-1	12 x 9	3/8	21.5	21	23.1	32.4	32.4	12	12	22.6

MTS MASTER TECH & SYSTEMS
MasterTech @mts-th
www.mastertechandsystems.com
02-756-0000

Cooling Joints
ข้อต่อน้ำ (JTW / JTWS)

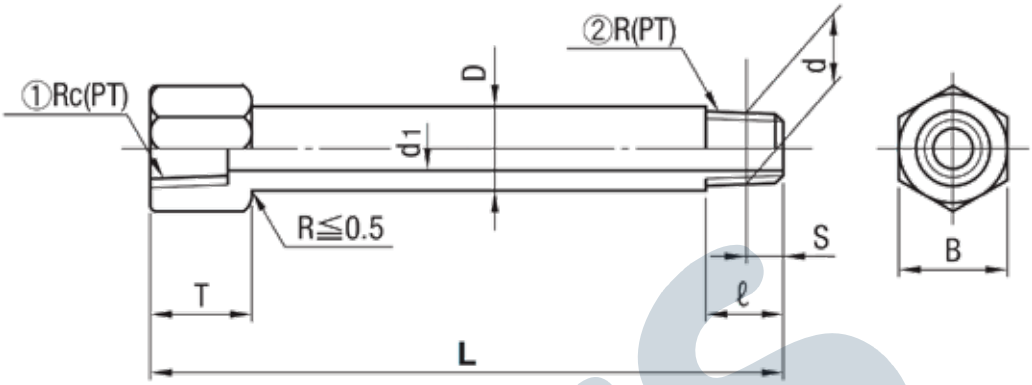

Code	Material
JTW	Brass
JTWS	SUS304

Order Code No. x L
JTW 1 x 170

Code	No.	B	T	D	d1	ℓ	S	d	① Rc(PT)	② R(PT)	L 5mm increments	L 10mm increments
JTW JTWS	1	14	13	10.5	6	10	3.97	9.728	1/8	1/8	30 - 200	210 - 300
	2	17	16	13.8	8	10	6.01	13.157	1/4	1/4		
	3	21	17	17.3	10	12	6.35	16.662	3/8	3/8		

Cooling Joints ข้อต่อทองเหลือง (JEMF / JEMFR)

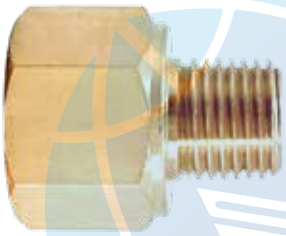

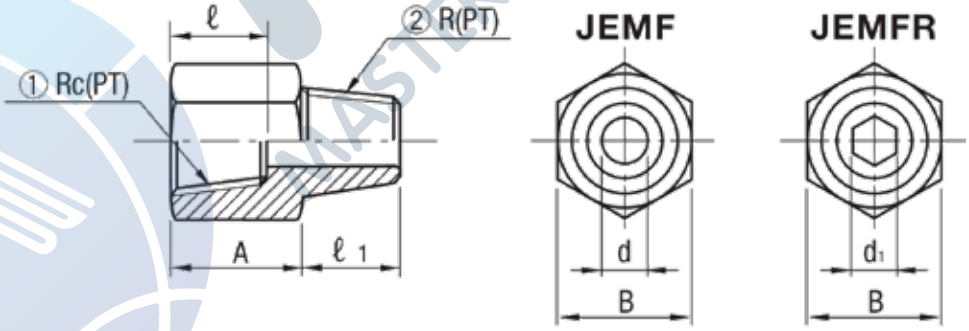

Code	JEMF / JEMFR
Material	Brass

Order Code No.
JEMF 21

Code	No.	① Rc(PT)	② R(PT)	A	B	d	⬡d1	ℓ	ℓ1
JEMF JEMFR	11	1/8	1/8	14	17	6	⬡ 6	10	10
	12		1/4	16					
	21	1/4	1/8						
	22		1/4		21	8	⬡ 8		12
	23		3/8					12	
	31	3/8	1/8			6	⬡ 6		10
	32		1/4			8	⬡ 8		12
	33		3/8			10	⬡ 10		

Cooling Joints
ข้อต่อทองเหลือง (JEMM / JEMMR)

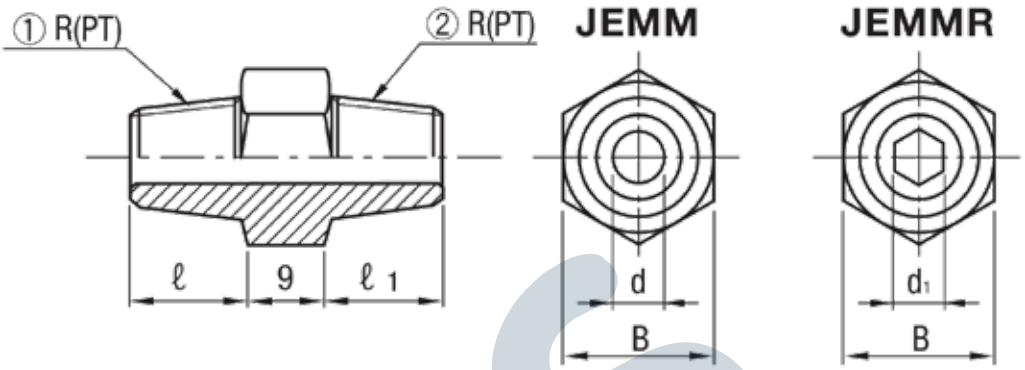

Code	JEMM / JEMMR
Material	Brass

Order Code No.
JEMM 22

Code	No.	① R(PT)	② R(PT)	B	d	⬡ d1	ℓ	ℓ1
JEMM JEMMR	11	1/8	1/8	14	6	⬡ 6	10	10
	12		1/4	17				
	13		3/8	21				12
	22	1/4	1/4	17	8	⬡ 8		10
	23		3/8	21				12
	33	3/8	3/8		10	⬡ 10	12	

Tapered Screw Conversion Plugs
ข้อต่อแปลงเกลียว (JEFS / JEFSR)

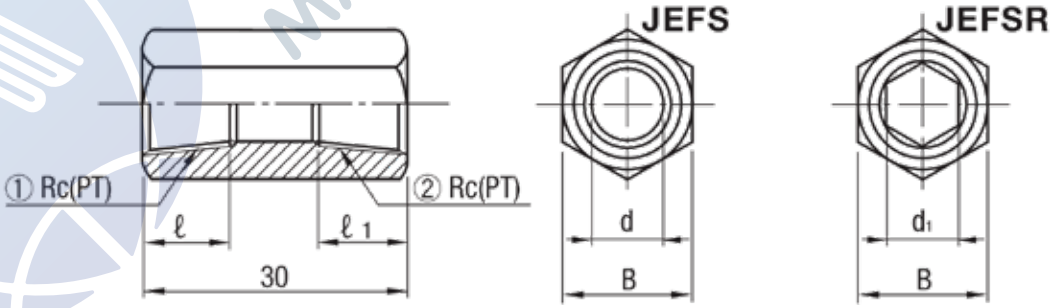

Code	JEFS / JEFSR
Material	Brass

Order Code No.
JEFS 12

Code	No.	① R(PT)	② R(PT)	B	d	⬡ d1	ℓ	ℓ1
JEFS JEFSR	11	1/8	1/8	17	6	⬡ 6	10	10
	12		1/4					
	22	1/4		19	8	⬡ 8		
	23		3/8					12
	33	3/8		22	10	⬡ 10	12	

MTS MASTER TECH & SYSTEMS
MasterTech @mts-th
www.mastertechandsystems.com
02-756-0000

L-Shaped Swivel Joints
ข้อต่อตัวแอล (LSN)

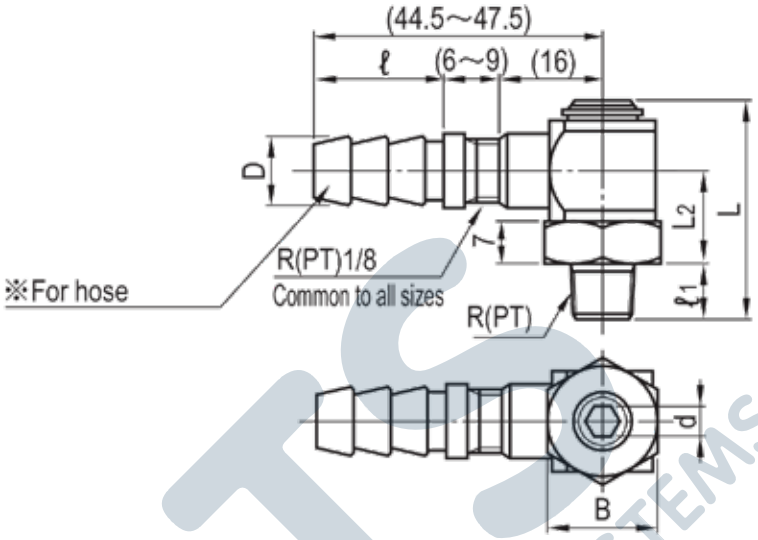

Code	LSN
Material	Brass

Order Code No.
LSN 1

Code	No.	For hose D	For hose ℓ	L	L2	Allen size B	⬡ d1	R(PT)	ℓ1	Max. pressure MPa (kgf/cm²)
LSN	1	12.6	22.5	36.5	15.75	19	⬡ 5	1/8	9.5	1.0 (10)
	2			39.5			⬡ 6	1/4	12.5	
	3			42.5	17.75		⬡ 6	3/8	13.5	

L-Shaped Swivel Joints ข้อต่อตัวแอล (LSNM)

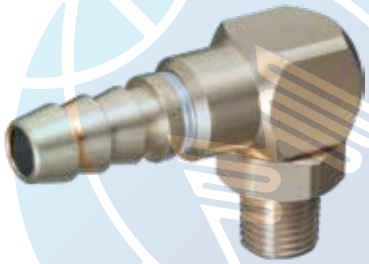

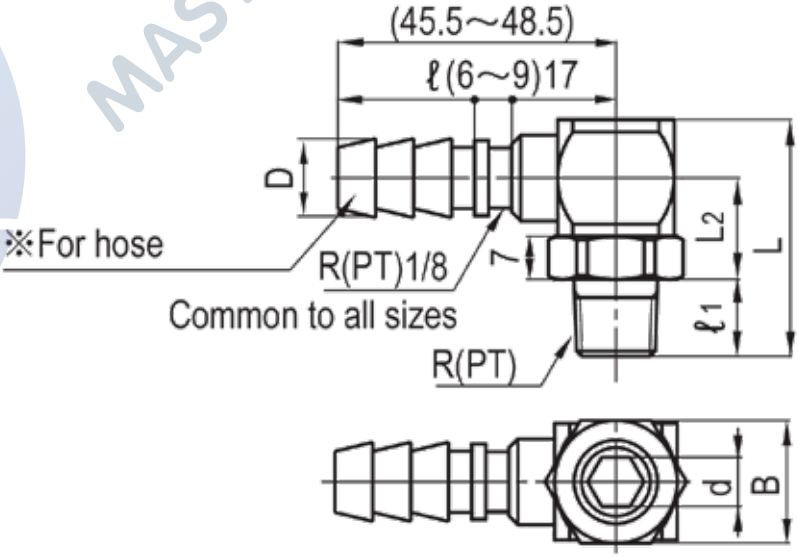

Code	LSNM
Material	Brass

Order Code No.
LSNM 1

Code	No.	For hose D	For hose ℓ	L	L2	Allen size B	⬡ d1	R(PT)	ℓ1	Max. pressure MPa (kgf/cm²)
LSNM	1	12.6	22.5	35.5	16.5	20	⬡ 6	1/8	9.5	1.0 (10)
	2			38.5			⬡ 8	1/4	12.5	
	3			39.5			⬡ 8	3/8	13.5	

L-Shaped Swivel Joints
ข้อตัวต่อแอล (LSNF)

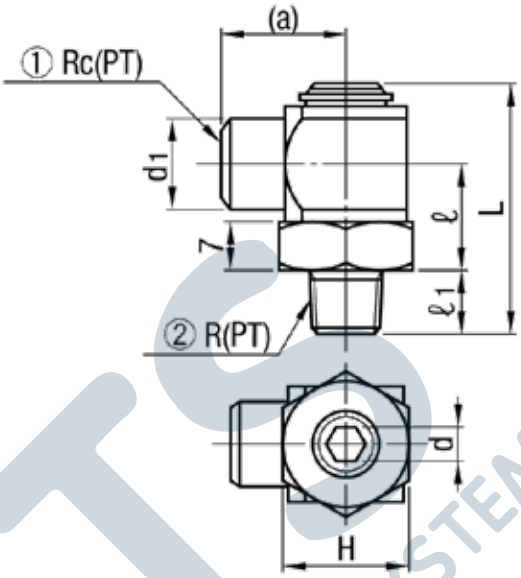

Code	LSNF
Material	Brass

Order Code No.
LSNF 1

Code	No.	① Rc(PT)	② R(PT)	H	d1	⬡d1	L	ℓ	ℓ1	(a)
LSNF	1	1/8	1/8	19	14	⬡5	36.5	15.75	9.5	16
	2	1/4	1/4		17	⬡6	39.5		12.5	20.5
	3	3/8	3/8		19		42.5	17.75	13.5	25.5

L-Shaped Swivel Joints ข้อตัวต่อแอล (LSNFM)

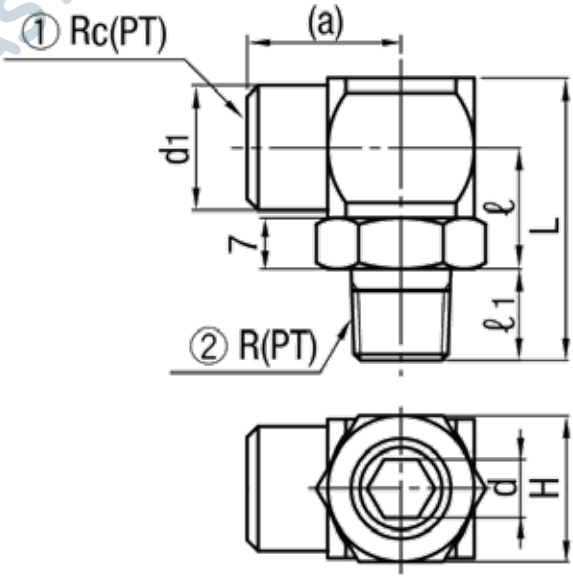

Code	LSNFM
Material	Brass

Order Code No.
LSNFM 1

Code	No.	① Rc(PT)	② R(PT)	H	d1	⬡d1	L	ℓ	ℓ1	(a)
LSNFM	1	1/8	1/8	20	14	⬡6	35.5	16.5	9.5	17
	2	1/4	1/4		17	⬡8	38.5		12.5	20.5
	3	3/8	3/8		19		39.5		13.5	24

L-Shaped Swivel Joints
ข้อต่อตัวแอล (LSP)

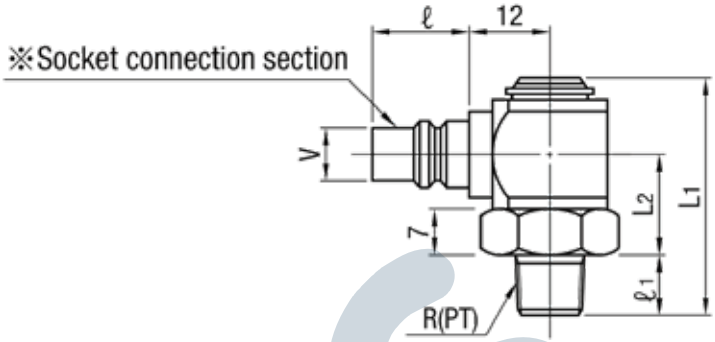

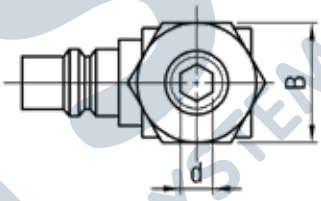

Code	LSP
Material	Brass

Order Code No.
LSP 1

Code	No.	R(PT)	Matching Sockets	Socket connection parts		L1	L2	Allen size B	⬡ d	ℓ1
				V	ℓ					
LSP	1	1/8	Mold Coupler Series Socket hole diameter V = 8 Common to all sizes	8	15	36.5	15.75	19	⬡6	9.5
	2	1/4				39.5			⬡8	12.5
	3	3/8				42.5	17.75			13.5

L-Shaped Swivel Joints ข้อต่อตัวแอล (LSPM)

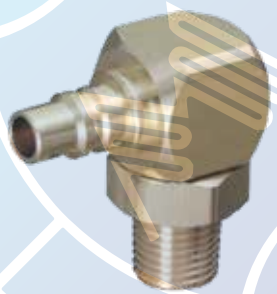

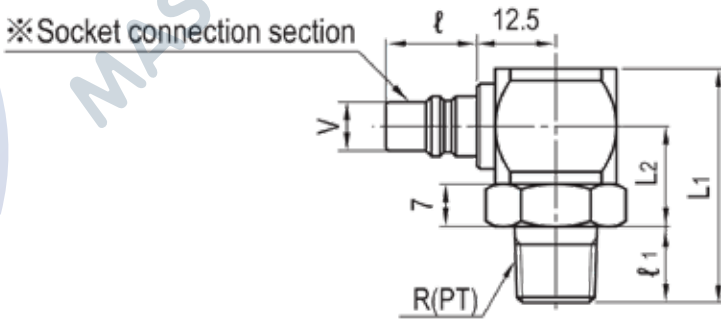

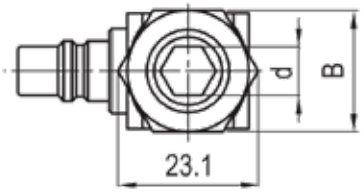

Code	LSPM
Material	Brass

Order Code No.
LSPM 1

Code	No.	R(PT)	Matching Sockets	Socket connection parts		L1	L2	Allen size B	⬡ d	ℓ1
				V	ℓ					
LSPM	1	1/8	Mold Coupler Series Socket hole diameter V = 8 Common to all sizes	8	15	35.5	16.5	20	⬡6	9.5
	2	1/4				38.5			⬡8	12.5
	3	3/8				39.5				13.5