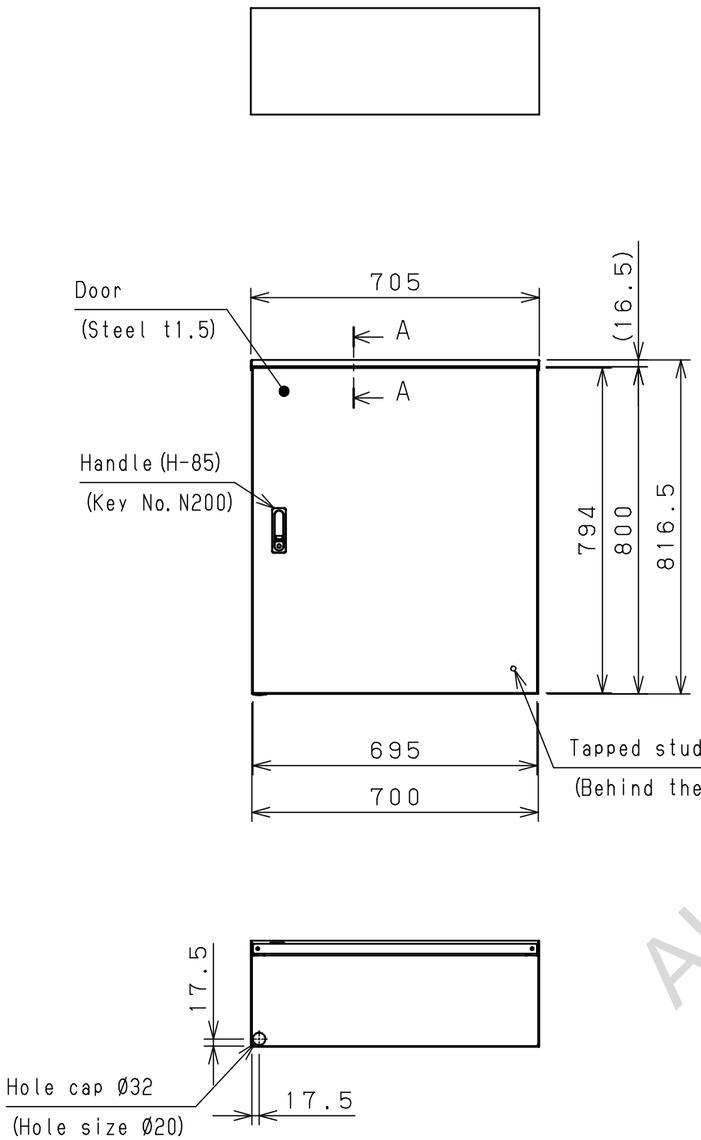

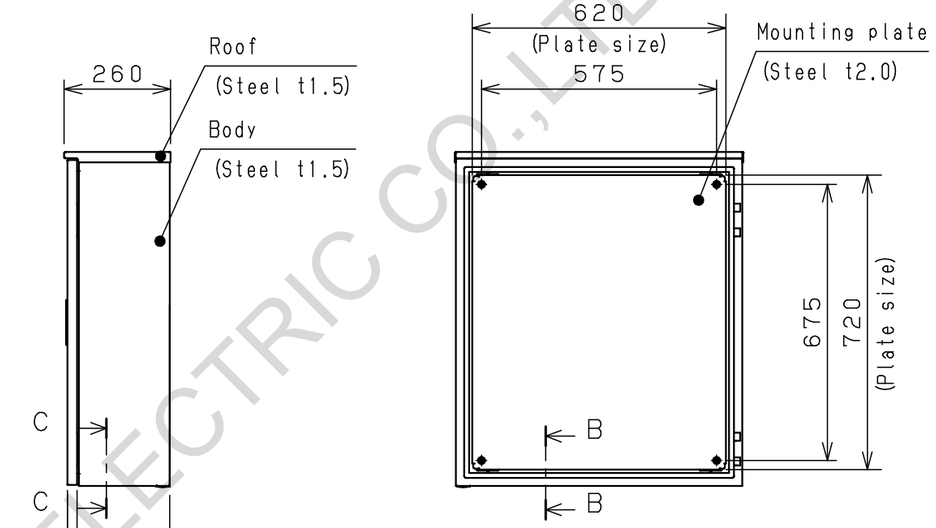

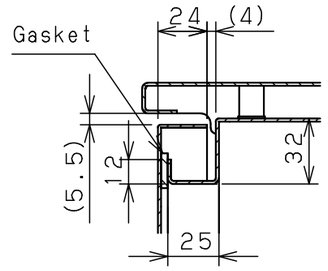

CROSS SECTION A-A
1 : 3

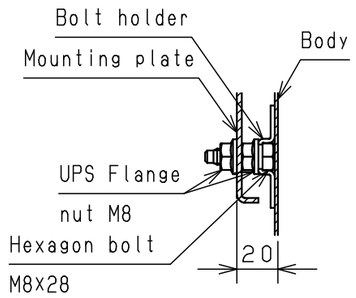

CROSS SECTION B-B
1 : 3

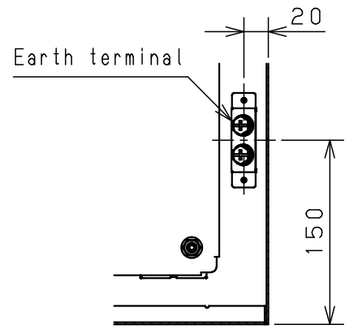

CROSS SECTION C-C
1 : 5

Model	Wall-mounting, outdoor-use, OR25-78TH		Name/ Type	OR25-78TH			
Body	Steel sheet, t1.5						
Door	Steel sheet, t1.5						
Mounting plate	Steel sheet, t2.0		Drawing number	–			1/1
Base	–						
Color	Outside	Light beige (5Y7/1) (Smooth)	A3 scale	Scale	Design	Drawing	Check
	Inside	Light beige (5Y7/1) (Smooth)		1:15	SUPAKIT	SUPAKIT	KONISHI
IP	IP55						
Weight	37.2 Kg		Date	13/ Oct./ 2021			

AURA ELECTRIC CO.,LTD.

© NITTO KOGYO BM

NITTO KOGYO BM