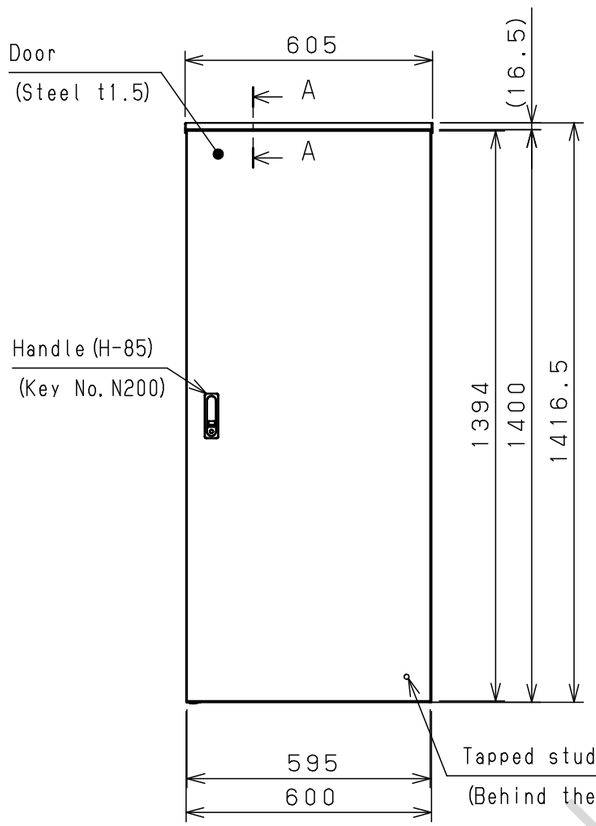

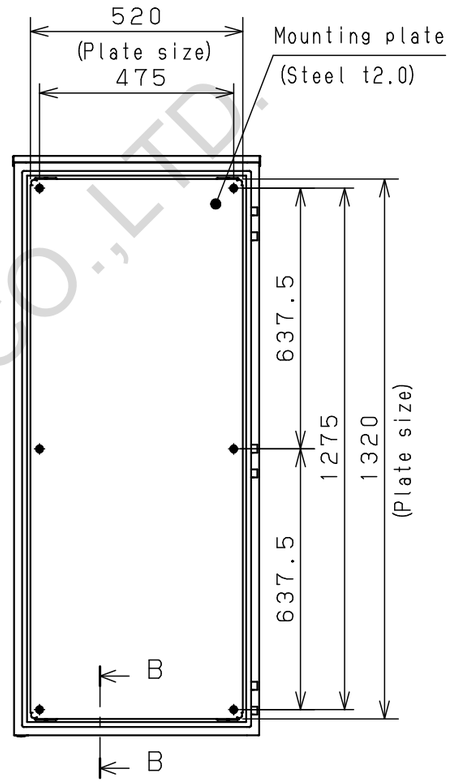

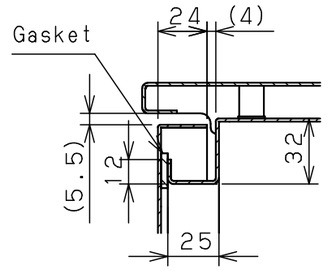

CROSS SECTION A-A
1 : 3

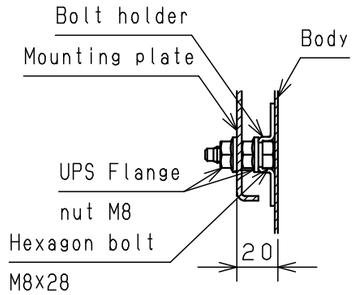

CROSS SECTION B-B
1 : 3

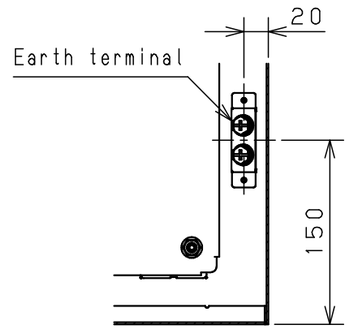

CROSS SECTION C-C
1 : 5

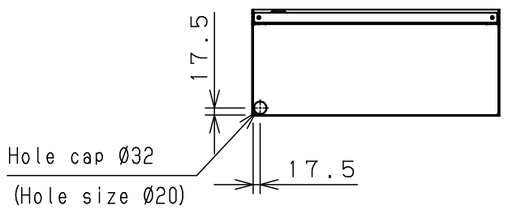

Model	Wall-mounting, outdoor-use, OR25-614TH	
Body	Steel sheet, t1.5	
Door	Steel sheet, t1.5	
Mounting plate	Steel sheet, t2.0	
Base	–	
Color	Outside	Light beige (5Y7/1) (Smooth)
	Inside	Light beige (5Y7/1) (Smooth)
IP	IP55	
Weight	51.4 Kg	

Name/ Type	OR25-614TH			
Drawing number	–			1/1
A3 scale	Scale	Design	Drawing	Check
	1:15	SUPAKIT	SUPAKIT	KONISHI
Date	13/ Oct./ 2021			

AURA ELECTRIC CO.,LTD.

© NITTO KOGYO BM

NITTO KOGYO BM