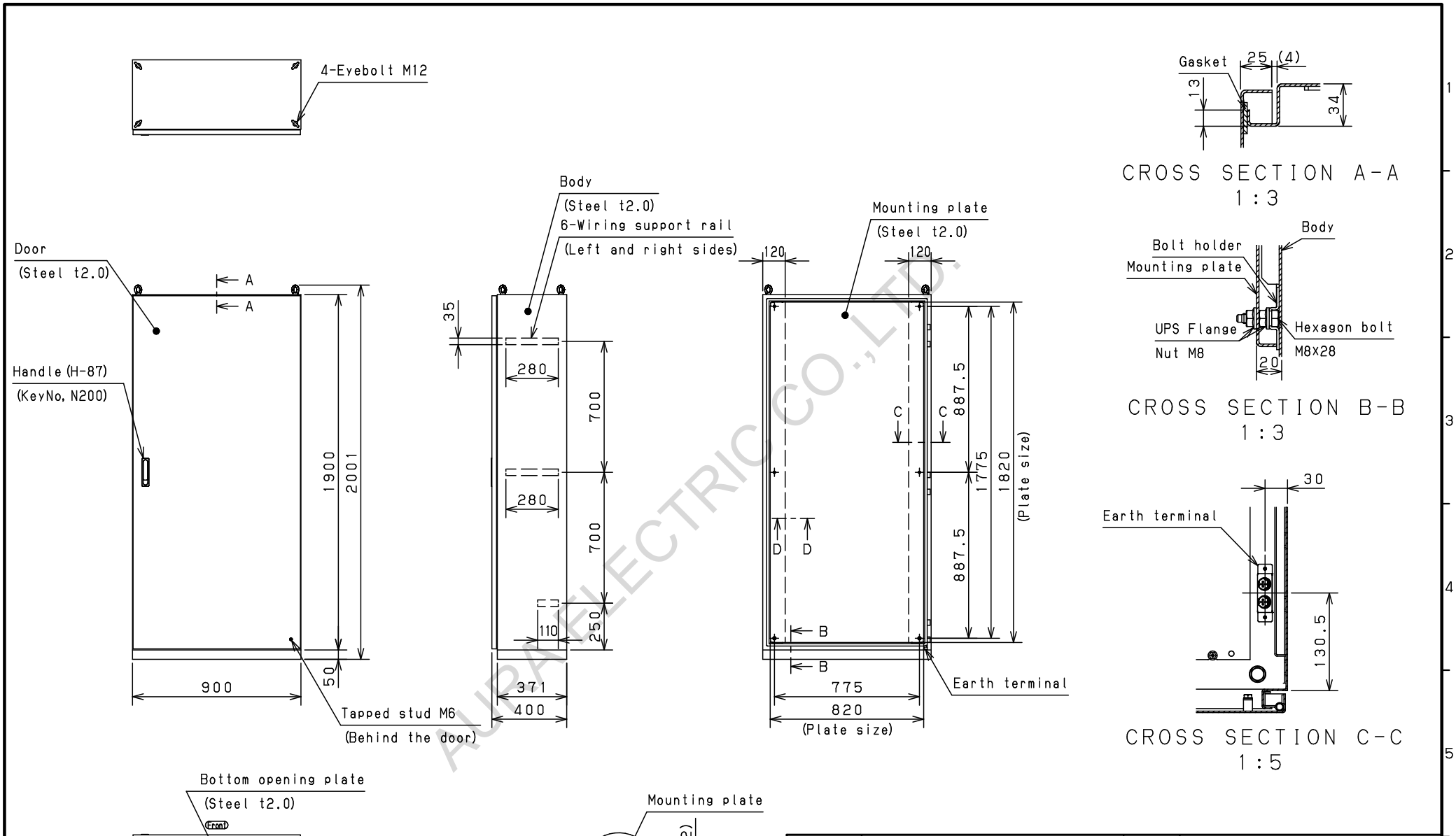

Model	Floor-standing, indoor-use, E40-919TH		Name/ Type	E40-919TH			
Body	Steel sheet, t2.0						
Door	Steel sheet, t2.0						
Mounting plate	Steel sheet, t2.0		Drawing number	–			1/1
Base	Steel sheet, t3.0						
Color	Outside	Light beige (5Y7/1) (Smooth)	A3 scale	Scale	Design	Drawing	Check
	Inside	Light beige (5Y7/1) (Smooth)		1:20	SUPAKIT	SUPAKIT	TSUGE
IP	IP4X						
Weight	149.8 Kg		Date 28 / Feb./ 2023				

AURA ELECTRIC CO., LTD.

© NITTO KOGYO BM

NITTO KOGYO BM