POINT LIGHTING SPECIFICATION GUIDANCE

PRODUCT MOUNTING DETAILS

OL21

OBSTRUCTION BEACON MOUNTING PATTERN

FOR PFB–37002 BEACONS

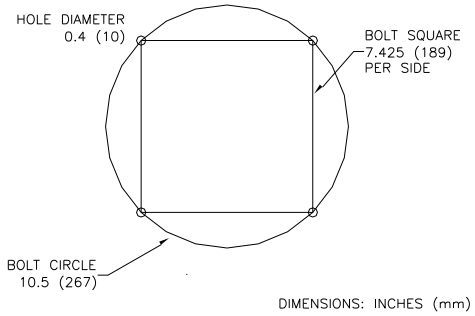

PREDRILLED MOUNTING BRACKETS ARE AVAILABLE

OL22

TYPICAL SINGLE RED BEACON ARRANGEMENT

- FAA L–864 FLASHING BEACON
- ICAO TYPES B & C
- FIXED MOUNT
- WELD BRACKET MOUNTED
- TYPICAL STACK DETAIL

LED:
PFB–37002–R–x–xx

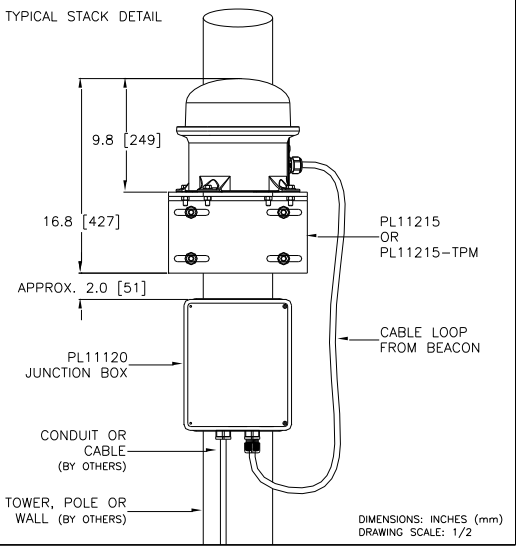

OL23

TYPICAL DOUBLE BEACON ARRANGEMENT PRIMARY & STANDBY RED BEACONS

- FAA L–864 FLASHING BEACON
- ICAO TYPES B & C
- FIXED MOUNT
- BOLT–ON BRACKET MOUNTED
- ALUMINUM BRACKET
- TWO BEACON MOUNT
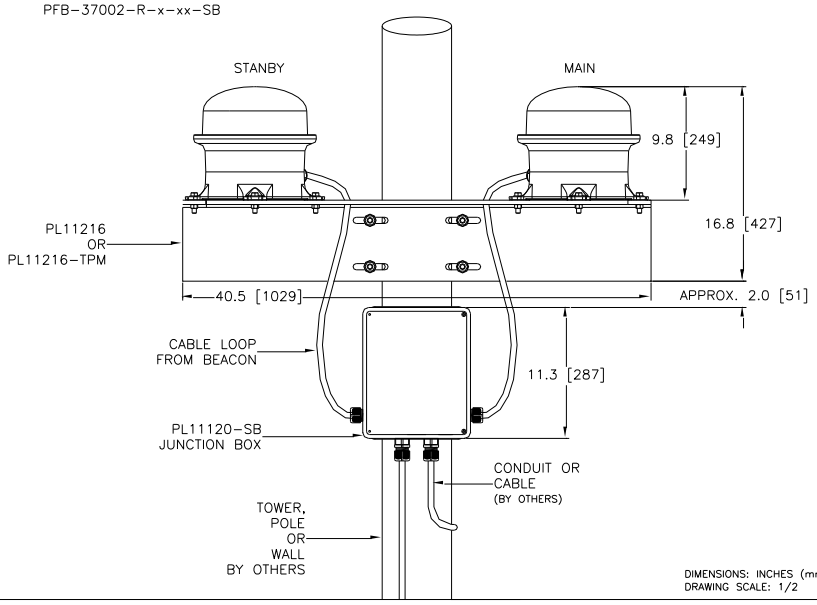
LED:
PFB–37002–R–x–xx
PFB–37002–R–x–xx–SB