POINT LIGHTING SPECIFICATION GUIDANCE

PRODUCT MOUNTING DETAILS

H21

HELIPORT PERIMETER LIGHT

- STANDARD FAA PEL
- FRANGIBLE MOUNT
- BASEPLATE ONLY
- BOTTOM ENTRY

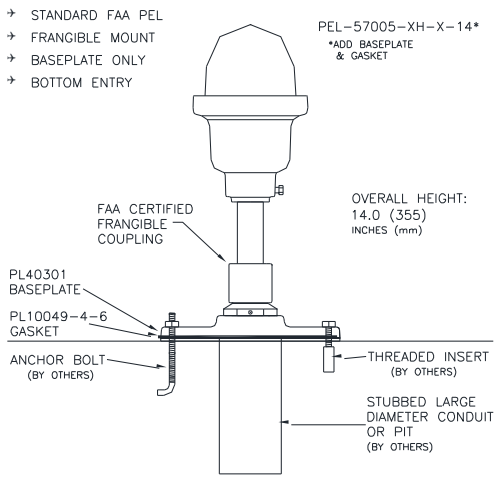

H22

HELIPORT PERIMETER & FLOODLIGHT

- COMBINATION PHL
- FRANGIBLE MOUNT
- BASEPLATE ONLY
- BOTTOM ENTRY

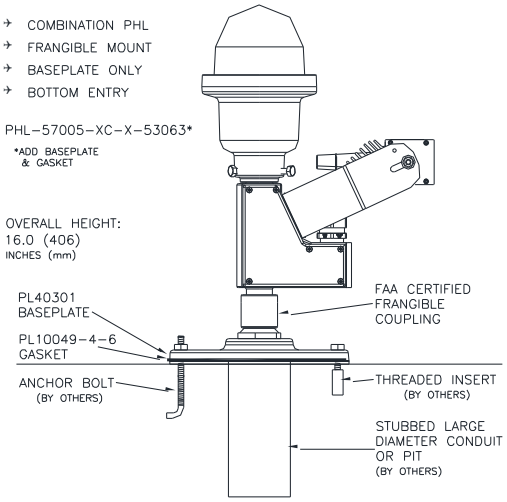

H23

HELIPORT PERIMETER LIGHT

- LOW PROFILE PEL
- RIGID MOUNT
- SURFACE MOUNTED
- EXPOSED CABLE OR RIGID CONDUIT ENTRY

PEL-57005-XH-X-JBS3

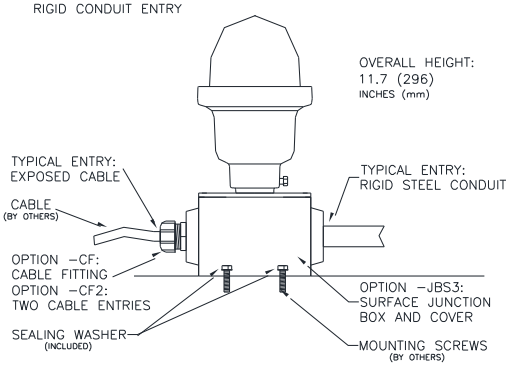

H24

OBSOLETE

POINT LIGHTING SPECIFICATION GUIDANCE

PRODUCT MOUNTING DETAILS

H25
HELIPORT PERIMETER & FLOODLIGHT

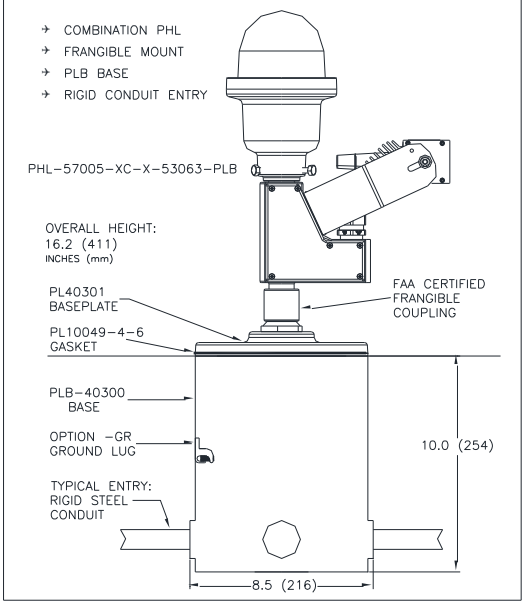

H26
HELIPORT PERIMETER & FLOODLIGHT

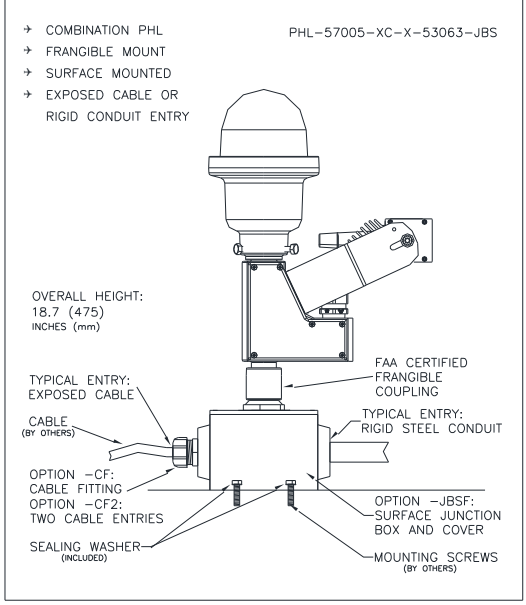

H27
HELIPORT PERIMETER & FLOODLIGHT

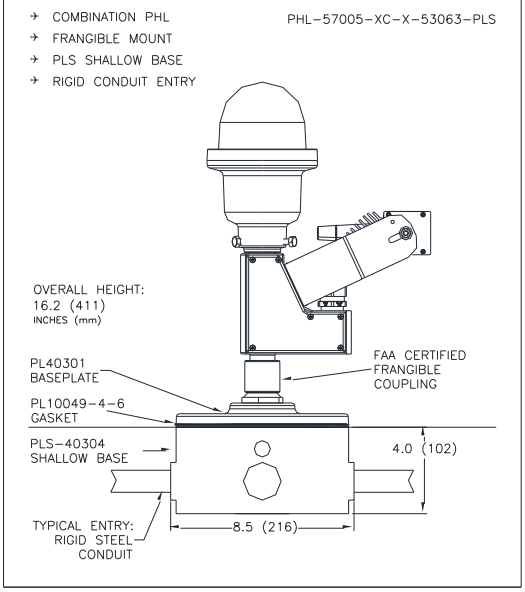

H28
HELIPORT PERIMETER & FLOODLIGHT

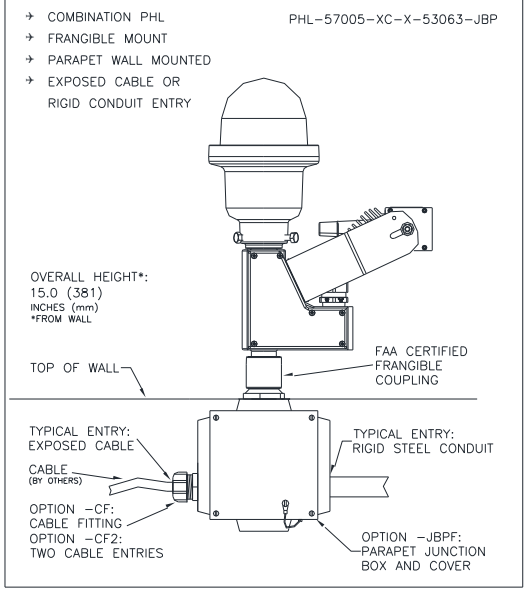

POINT LIGHTING SPECIFICATION GUIDANCE

PRODUCT MOUNTING DETAILS

H33

HELIPORT PERIMETER & FLOODLIGHT

- COMBINATION PHL
- FRANGIBLE MOUNT
- LSM SURFACE BASE
- RIGID CONDUIT ENTRY

PHL-57005-XC-X-5306X-LSM

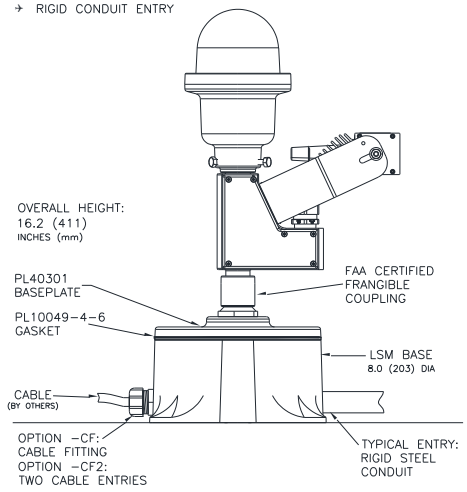

H34

H35

HELIPORT PERIMETER LIGHT

- STANDARD FAA PEL
- LOW PROFILE SURFACE MOUNT
- FRANGIBLE MOUNT
- PLB BASE
- RIGID CONDUIT ENTRY

PEL-57005-XH-X-PLB

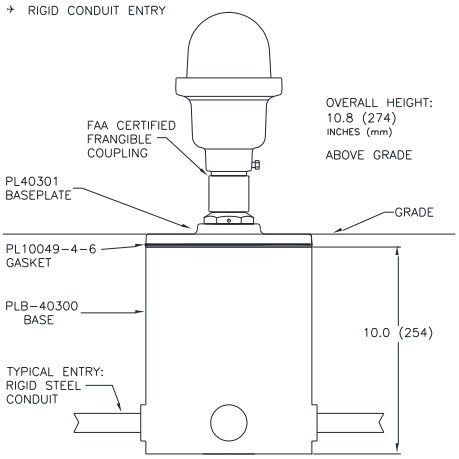

H36

HELIPORT PERIMETER LIGHT

- LOW PROFILE PEL
- RIGID MOUNT
- PLS SHALLOW BASE
- EXPOSED CABLE OR RIGID CONDUIT ENTRY

PEL-57005-XH-X-LP34-PLS

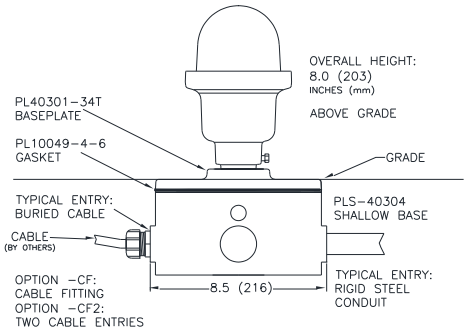

POINT LIGHTING CORPORATION

POINT LIGHTING SPECIFICATION GUIDANCE
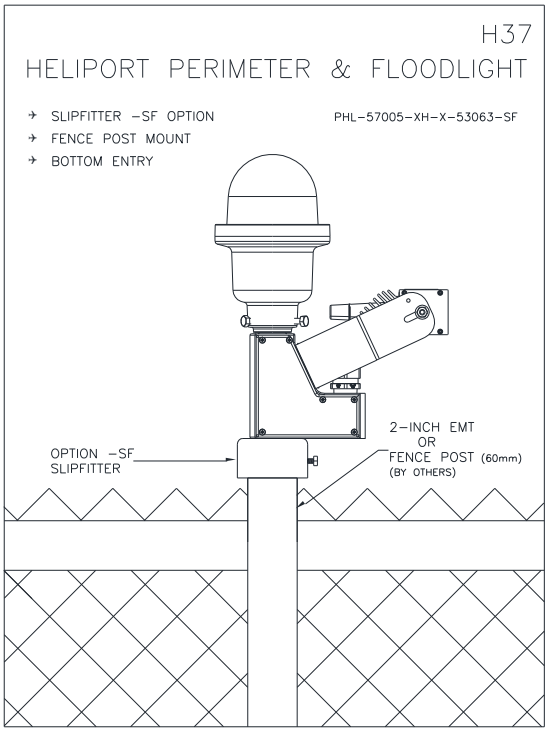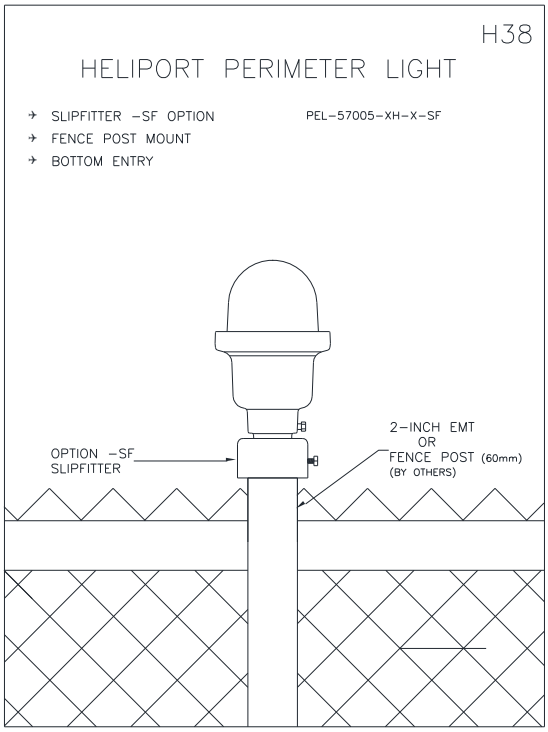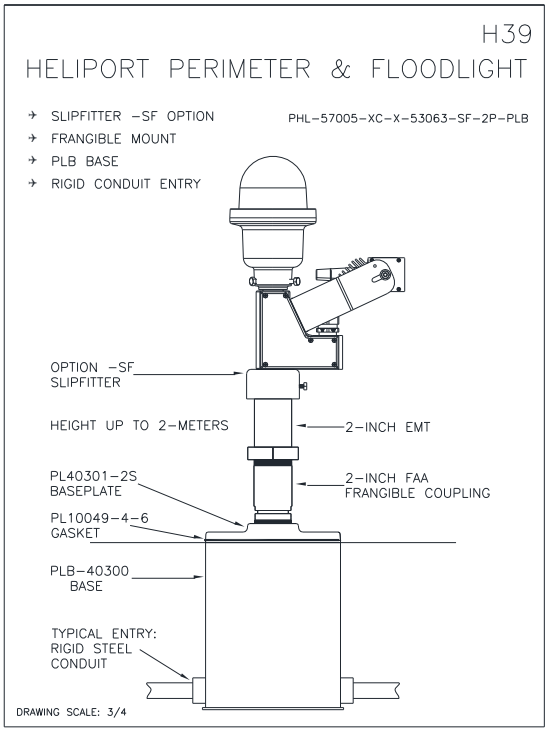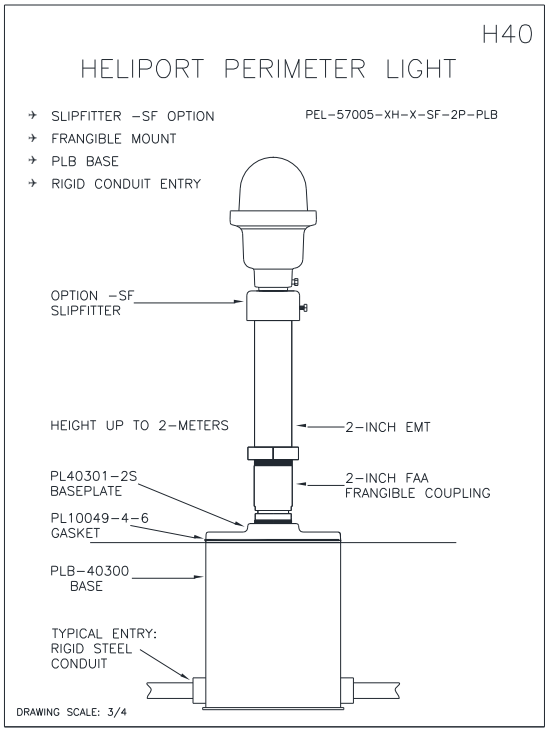
PRODUCT MOUNTING DETAILS