SIEMENS

Air velocity sensor

QVM62.1-HE

To control air velocity

- To control air velocity to a constant value
- To compensate for pressure variations
- To monitor air flow in air ducts

Use

The sensor controls air velocity to a constant value, balance outpressure fluctuations (supply or extract air control), or monitor the flow in air ducts.
It primarily is used for modulating fan control in primary plants to set the basic volume flow.

Functions

Mode of operation

The QVM62.1-HE records the air velocity as a measured value and converts it to an active DC 0...10 V or 4…20 mA output signal.

Three measuring ranges are available::

- 0…5 m/s
- 0…10 m/s
- 0…15 m/s.

The sensor measures a point, i.e., it measures the values at a specific location in the flow profile. The sensor's immersion depth is the key measure for recording the mean air velocity in the duct. The immersion depth is based on the flow profile.

The measurement process is based on the anemometer measuring principle.

The specially developed, robust sensing element is nearly insensitive to any kind of dirt in the airflow.

Technical design

Mechanical design

The air velocity sensor consists of:

- Immersion stem with sensor head and sensing element
- Extension pipe with fitting
- Immersion stem end with flow direction arrow
- Adjustable connecting flange
- Transducer
- Connection cable, shielded, four-core, 1 m long

A scale with 0.5 cm grating on the immersion stem and the extension pipe indicates the immersion depth.

The connecting flange is used to attach and seal the immersion stem on the duct wall.

A plastic housing with removable cover accommodates the transducer; it can be screwed to a flat surface.

The sensor cable is connected; the sensor and the transducer together represent a unit.

The measuring ranges are selected by inserting or removing a plug-in jumper. Protection against false wiring is provided related to own voltages, i.e., measuring output X1 is short-circuit proof.

-
- The sensor head connections are not protected against AC/DC 24 V operating voltage.

Basic design

Wiring and setting elements

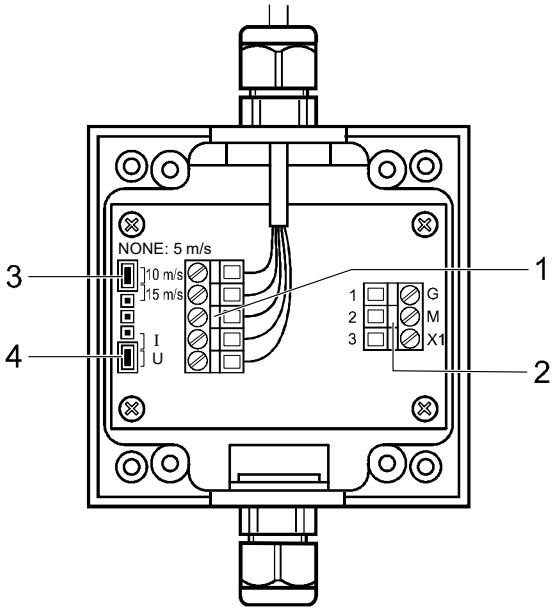

1	Terminal block for connection to the immersion stem	2	Terminal block for connection to controller
3	Plug-in unit for setting the three velocity ranges. The following applies: No plug-in jumper = 0…5 m/s Plug-in jumper on 1 and 2 = 0…10 m/s (factory setting) Plug-in jumper on 2 and 3 = 0…15 m/s	4	Terminal block for selection of the output signal: Pos I= DC 4…20 mA Pos U = DC 0…10 V

Type summary

Designation	Order number	Type
Air velocity sensor	S55720-S536	QVM62.1-HE

Ordering

Please specify the quantity, order number, and type when ordering:

Air velocity sensor, S55720-S536, **QVM62.1-HE**

Product documentation

Installation instructions for the air velocity sensor are including on the inside of the packaging.

A CE declaration is included in German and English.

Related documents such as the environmental declarations, CE declarations, etc., can be downloaded from the following Internet address:

https://siemens.com/bt/download

Notes

Safety

⚠	**CAUTION**
	National safety regulations Failure to comply with national safety regulations may result in personal injury and property damage. ● Observe national provisions and comply with the appropriate safety regulations.

Engineering

Place the sensor in the measuring path where the air flow settles: Not near dampers, registers, and changes in direction in ducts.

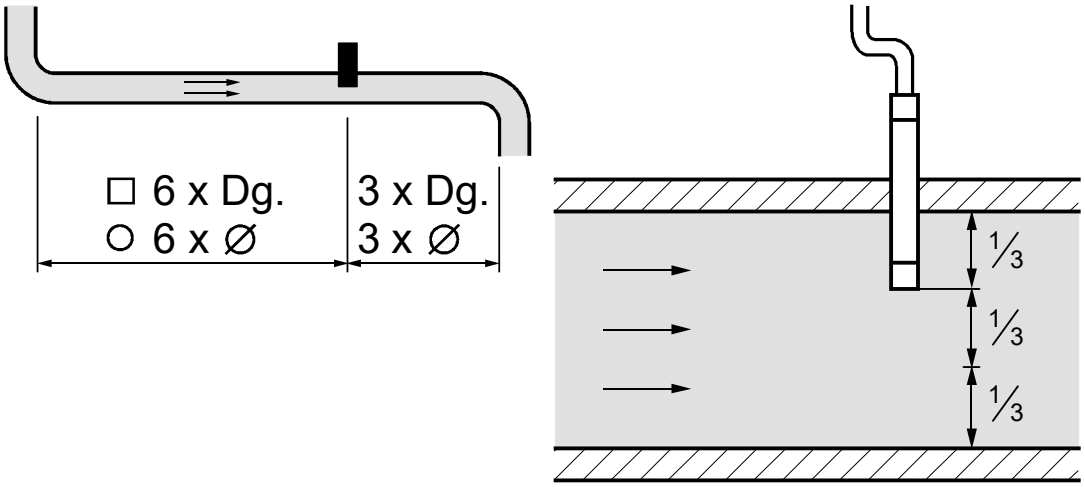

Use a transformer with safety extra-low voltage (SELV) with separate winding for 100% ON-time. Observe all local safety rules and regulations pertaining to sizing and protecting transformers.

Note the permissible line length to the controller.

Installation

Mount the immersion stem so that the air flows through the opening at the sensor head.

The immersion stem is premounted and wired to the transducer on delivery. The sensor pipes and the end piece with the direction arrow are prearranged on the connecting cable, fit them together (use the direction-oriented snap-on connections). The connecting flange can be removed from the cable if not needed. The connecting flange is not attached on delivery.

Installation instructions for the air velocity sensor are including on the inside of the packaging.

Commissioning

Check the wiring, the air velocity range settings and correct placement prior to commissioning the immersion stem (mounting instructions!).

Maintenance

!	**NOTICE**
	Residual water Water can short the life of the air velocity sensor.

In very dusty environments, clean the air velocity sensor on a regular basis. Select a maintenance interval based on how dirty the plant is.

Disposal

	The device is considered an electronic device for disposal in terms of the European Directive and may not be disposed of as domestic waste. ● Use only designated channels for disposing the devices. ● Comply with all local and currently applicable laws and regulations.

Warranty service

Technical data on specific applications are valid only together with Siemens products listed under "Equipment combinations". Siemens rejects any and all warranties in the event that third-party products are used.

Power supply	
Operating voltage	AC/DC 24 V ±20 % (SELV)
Frequency	50/60 Hz
Power consumption	< 5 VA Current : AC: Max. 190 mA DC: Max. 70 mA
External fusing of supply line(s)	Non-renewable fuse, slow to a max. 10 A or Circuit breaker max. 13 A Tripping characteristic B, C, D per EN 60898 or Power source with current limitation of max. 10 A

Measured data		
Measuring ranges, adjustable	0…5 m/s 0…10 m/s (factory setting) 0…15 m/s	
Measuring accuracy at 20 °C 45 % r.F., 1013 hPa	0…5 m/s 0...10 m/s 0...15 m/s	±(0.2 m/s + 3 % of measured value) ±(0.2 m/s + 3 % of measured value) ±(0.2 m/s + 3 % of measured value)
Permissible air velocity	20 m/s	
Direction dependence	<3 % of measured value at < ±10°	
Time constant t_{90} at 10 m/s	ca. 4 s	

Signal output X1	
Voltage output	DC 0…10 V, ±1 mA
Current output	DC 4…20 mA, 0…500 Ω

Line lengths		
Perm. line length to controller at	Ø 0.6 mm dia copper cable 1 mm^2 copper cable 1.5 mm^2 copper cable	50 m 150 m 300 m
Line length to the sensor head		1 m (fixed wiring)

Connections	
Mechanical	Screw connection
Electrical	Screw terminal, max. 2 x 1.5 mm^2

Safety class and degree of protection	
Protection class	III
Degree of protection of housing Transducer Sensor head	 IP65 as per EN 60529 IP20 as per EN 60529

Environmental conditions	
Operation (transducer and immersion stem) Climatic conditions ● Temperature ● Humidity (non-condensing) Mechanical conditions Chemical conditions	IEC 721-3-3 Class 3K5 -10…+45 °C <95 % r.h. Class 3M2 Class 3C2
Storage (transducer and immersion stem) Climatic conditions ● Temperature ● Humidity (non-condensing) Mechanical conditions	IEC 721-3-1 Class 1K3 -30…+60 °C <95 % r.h. Class 1M2
Transportation (transducer and immersion stem) Climatic conditions ● Temperature ● Humidity (non-condensing) Mechanical conditions	IEC 721-3-2 Class 2K3 -25…+60 °C <95 % r.h. Class 2M2

Materials and colors	
Housing bottom	polycarbonate, RAL 7001 (silver-gray)
Housing cover	polycarbonate, RAL 7035 (light-gray)
Sensor tubes	polycarbonate, RAL 7001 (silver-gray)
Sensor head, wiring, end piece	polycarbonate, RAL 7035 (light-gray)
Connecting flange	polycarbonate, RAL 7001 (silver-gray)
Sensor, total	Silicone-free

Standards, directives and approvals	
Electromagnetic compatibility (field of use)	For residential, commercial and industrial environment
EU conformity (CE)	CM2T1932xx *)
UK compliance (UKCA)	A5W00188823A *)
EAC compliance	Eurasian compliance

Environmental compatibility
The product environmental declaration A5W00170837A*) contains data on environmentally compatible product design and assessments (RoHS compliance, materials composition, packaging, environmental benefit, disposal).

Dimensions (weight)	
With packaging	0.352 kg

*) Documents can be downloaded at http://siemens.com/bt/download.

Connection diagrams

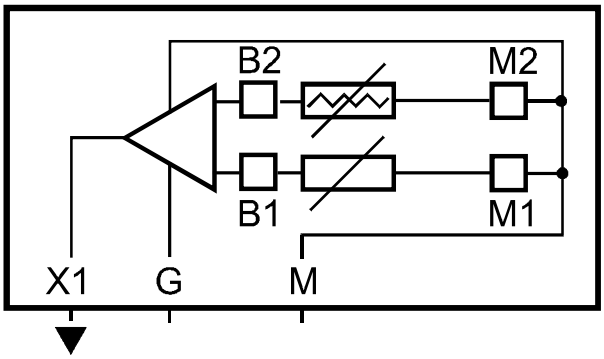

G	Operating voltage AC/DC 24 V
M	Measuring neutral/ operating voltage ground
X1	Output signal: DC 0…10 V or 4…20 mA

Dimensions

Dimensions (in mm)

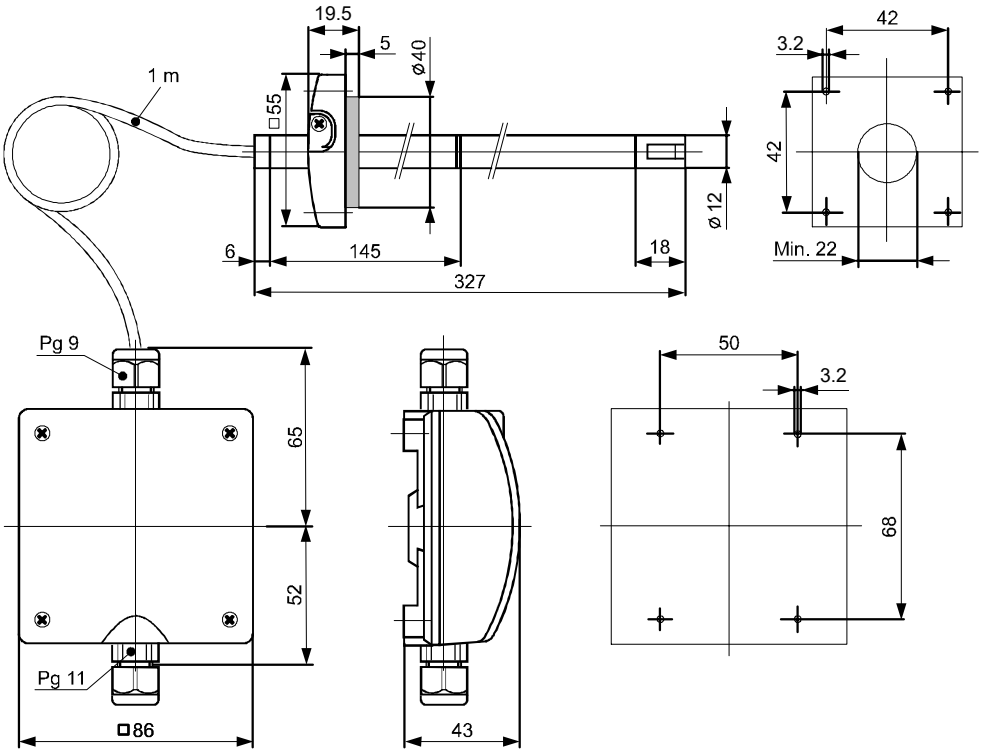

Issued by
Siemens Switzerland Ltd
Smart Infrastructure
Global Headquarters
Theilerstrasse 1a
CH-6300 Zug
+41 58 724 2424
www.siemens.com/buildingtechnologies

Document ID A6V12409424_en--_a

Edition 2021-08-23