MD 71 2a

1-Phase 230 V 50 Hz

Duty Type	: S1
Degree of protection	: IP 55 (TEFC)
Insulation class	: F (155 °C)
Temp rise	: Class B (80K)
Mounting Design	: B3

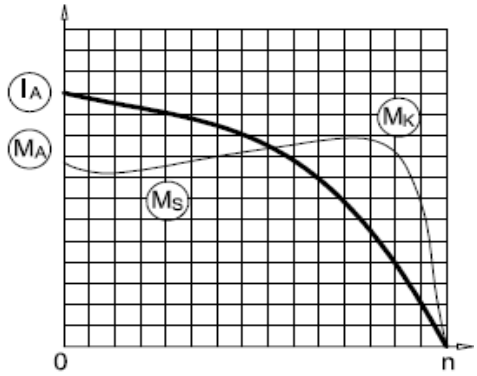

ELECTRICAL DESIGN

Rated output (kW)	: 0.37
Speed (rpm)	: 2885
Rated current (A)	: 2.5
Torque – Mn (Nm)	: 1.22
Permanent Capacitor 400V (μF)	: 15
Cos φ	: 0.96
Efficiency %	: 67.0
Moment of inertia J $(kgm)^2$	: 0.00028

Locked rotor Current – Ia (A)	: 10
Ia / In	: 4
Locked rotor Torque – Ma (Nm)	: 0.8
Ma / Mn	: 0.65
Breakdown Torque – Mk (Nm)	: 2.7
Mk / Mn	: 2.2

MECHANICAL DESIGN

Frame	: Aluminium
End shields	: Aluminium
Cooling fan	: Plastic
Terminal box	: Plastic
Cable gland	: Pg 16
No of cable glands	: 1

Bearing Arrangement

	Drive End	Non Drive End
Standard design	6202 ZZ	6202 ZZ

Paint : RAL 7031- Grey

Approximate weight (kg) : 5.9

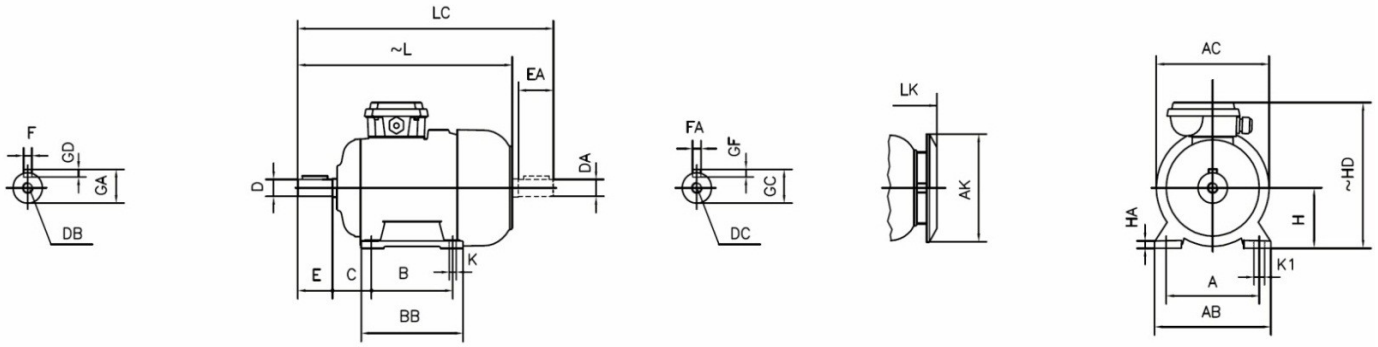

DIMENSIONS

FOOT MOUNTED MOTORS - B3, B6, B7, B8 B15, V5, V6																			
H	HD ~	HA	A	AB	AC Ø	AK Ø	K	K1	B	BB	L ~	LC	LK ~	C	E EA	DB DC	DØ DAØ	GA GC	FXGD FAXGF
71	196	10	112	140	138	116	7	11	90	108	247	282	277	45	30	M5	14	16	5X5