AMFLO
PRECISION GAS CONTROLS

AMFLO
PRECISION GAS CONTROLS

AMFLO reserves the right to modify product specifications and maintains the ultimate authority for interpretation within the permissible legal framework. This catalog is for reference purposes only. For the latest information, please visit our official website or contact your sales consultant.

Catalog#:202403

AMFLO FLUID SYSTEMS & COMPONENTS CO., LTD.

No.888 Guinan Rd, Songjiang District, Shanghai, China. Post Code: 201604
+86 21 57736701 57736601 57736612
+86 21 57736602
market@amfloco.com
www.amfloco.com

VALVES & ACCESSORIES

Precision gas control solutions for your ideas

Content

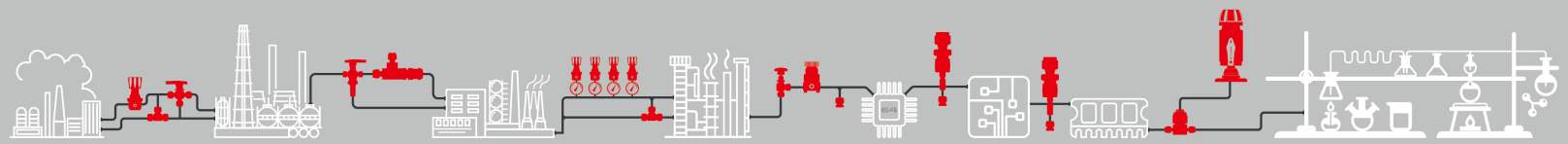

BV10 Series Ball Valves

SS-BV10-TF6

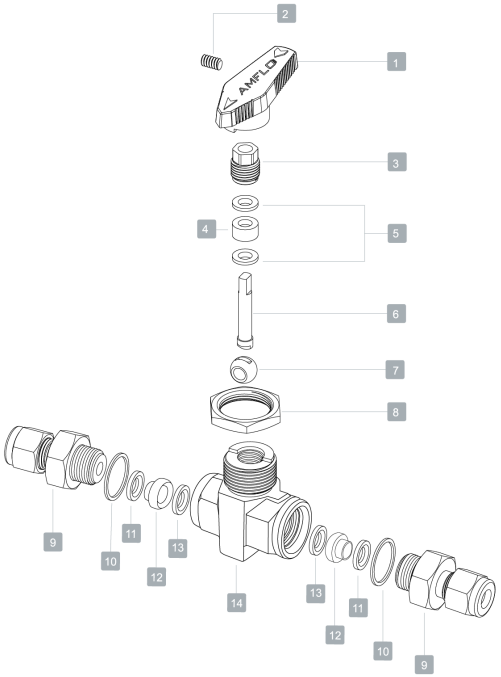

Features

- Low torque operation
- Max Operating Pressure: 4000 psi (276 bar)
- Operating Temperature: -65 °F ~ 450 °F (-54 °C ~ 232 °C)
- Various types of connection available, ranging in size from 1/16 in. ~ 3/4 in. (3 mm ~ 18 mm).
- Various color available for nylon handles

Pressure Temperature Rating

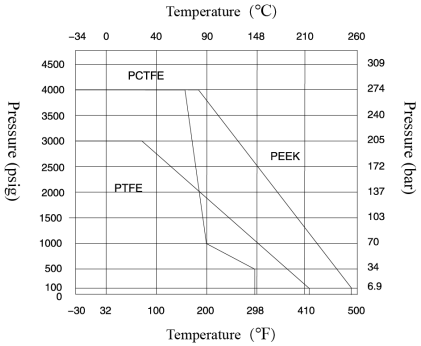

Materials Of Construction

NO.	Component	QTY	Maximum Allowable Operating Pressure	
			Up to 3000 psig	Up to 4000 psig
1	Handle	1	ABS	ABS
2	Handle Set Screw	1	SS304	SS304
3	Packing Bolt	1	SS316	SS316
4	Packing	3	Improved PTFE	PCTFE / PEEK
5	Gland	2	SS316	SS316
6	Stem	1	SS316	SS316
7	Ball Body	1	SS316	SS316
8	Panel Nut	1	SS316	SS316
9	End Bonnet	2	SS316	SS316
10	Body Seal Ring	2	PTFE	PTFE / PEEK
11	Gasket	2	Improved PTFE	PTFE / PEEK
12	Gasket Seat	2	SS316	SS316
13	Valve Seat	2	Improved PTFE	PTFE / PEEK
14	Body	1	ASTM A351 Gr.CFBM SS	ASTM A-276 SS

Dimensions

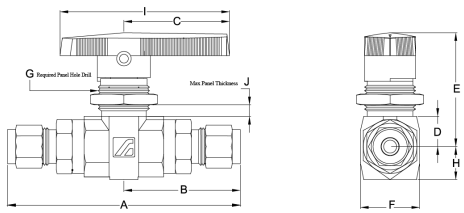

Dimensions

Size	Connection		Aperture		CV	A		B		C		D		E		F		G		H		I *		J **	
	mm	inch	mm	inch		mm	inch	mm	inch	mm	inch	mm	inch	mm	inch	mm	inch	mm	inch	mm	inch	mm	inch	mm	inch
1/16"	AM-LOK (Imperial)		1.3	0.051	0.1	70.2	2.76	35.1	1.38	38	1.50	10.5	0.41	42.4	1.67	22.2	0.87	19.3	0.76	12.3	0.48	62.4	2.46	8	0.315
1/8"			2.4	0.094	0.26	83.8	3.3	41.9	1.65	38	1.50	10.5	0.41	42.4	1.67	22.2	0.87	19.3	0.76	12.3	0.48	62.4	2.46	8	0.315
1/4"			4.8	0.189	1.04	86.5	3.41	43.25	1.7	38	1.50	10.5	0.41	42.4	1.67	22.2	0.87	19.3	0.76	12.3	0.48	62.4	2.46	8	0.315
3/8"			7.1	0.280	2.34	90	3.54	45	1.77	38	1.50	10.5	0.41	42.4	1.67	22.2	0.87	19.3	0.76	12.3	0.48	62.4	2.46	8	0.315
1/2"			10.3	0.406	6.42	118.8	4.68	59.4	2.34	56.5	2.2	17.5	0.69	56.5	2.2	32.0	1.26	22.9	0.90	17.5	0.69	95	3.74	9.7	0.38
3/4"			10.3	0.406	6.42	118.8	4.68	59.4	2.34	56.5	2.2	17.5	0.69	56.5	2.2	32.0	1.26	22.9	0.90	17.5	0.69	95	3.74	9.7	0.38
3mm	AM-LOK (Metric)		2.4	0.094	0.26	83.8	3.3	41.9	1.65	38	1.50	10.5	0.41	42.4	1.67	22.2	0.87	19.3	0.76	12.3	0.48	62.4	2.46	8	0.315
6mm			4.8	0.189	1.5	86.5	3.41	43.25	1.7	38	1.50	10.5	0.41	42.4	1.67	22.2	0.87	19.3	0.76	12.3	0.48	62.4	2.46	8	0.315
8mm			7.1	0.280	2.34	90.4	3.56	45.2	1.78	38	1.50	10.5	0.41	42.4	1.67	22.2	0.87	19.3	0.76	12.3	0.48	62.4	2.46	8	0.315
10mm			7.1	0.280	2.34	92	3.62	46	1.81	38	1.50	10.5	0.41	42.4	1.67	22.2	0.87	19.3	0.76	12.3	0.48	62.4	2.46	8	0.315
12mm			9.5	0.375	5.57	118.4	4.66	59.2	2.33	56.5	2.2	17.5	0.69	56.5	2.2	32.0	1.26	22.9	0.90	17.5	0.69	95	3.74	9.7	0.38
18mm			10.3	0.406	6.42	118.4	4.66	59.2	2.33	56.5	2.2	17.5	0.69	56.5	2.2	32.0	1.26	22.9	0.90	17.5	0.69	95	3.74	9.7	0.38
1/8"	NPT/BSPT (F)		4.2	0.165	0.93	60	2.36	30.0	1.18	28.7	1.13	10.5	0.41	42.4	1.67	22.2	0.87	19.3	0.76	12.3	0.48	62.4	2.46	8	0.315
1/4"			7.1	0.280	2.34	82.2	3.24	41.1	1.62	38	1.50	10.5	0.41	42.4	1.67	22.2	0.87	19.3	0.76	12.3	0.48	62.4	2.46	8	0.315
3/8"			7.1	0.280	2.34	82.2	3.24	41.1	1.62	38	1.50	10.5	0.41	42.4	1.67	22.2	0.87	19.3	0.76	12.3	0.48	62.4	2.46	8	0.315
1/2"			10.3	0.406	6.42	112.8	4.44	56.4	2.22	56.5	2.2	17.5	0.69	56.5	2.2	32.0	1.26	22.9	0.90	17.5	0.69	95	3.74	9.7	0.38
3/4"			10.3	0.406	6.42	118.4	4.66	59.2	2.23	56.5	2.2	17.5	0.69	56.5	2.2	32.0	1.26	22.9	0.90	17.5	0.69	95	3.74	9.7	0.38
1/8"	BSPP (F)		4.2	0.165	0.93	60	2.36	30.0	1.18	28.7	1.13	10.5	0.41	42.4	1.67	22.2	0.87	19.3	0.76	12.3	0.48	62.4	2.46	8	0.315
1/4"			7.1	0.280	2.34	82.2	3.24	41.1	1.62	38	1.50	10.5	0.41	42.4	1.67	22.2	0.87	19.3	0.76	12.3	0.48	62.4	2.46	8	0.315
3/8"			7.1	0.280	2.34	82.2	3.24	41.1	1.62	38	1.50	10.5	0.41	42.4	1.67	22.2	0.87	19.3	0.76	12.3	0.48	62.4	2.46	8	0.315
1/2"			10.3	0.406	6.42	112.8	4.44	56.4	2.22	56.5	2.2	17.5	0.69	56.5	2.2	32.0	1.26	22.9	0.90	17.5	0.69	95	3.74	9.7	0.38
3/4"			10.3	0.406	6.42	118.4	4.66	59.2	2.23	56.5	2.2	17.5	0.69	56.5	2.2	32.0	1.26	22.9	0.90	17.5	0.69	95	3.74	9.7	0.38
1/8"	NPT/BSPT (M)		4.2	0.165	0.93	54.4	2.14	27.2	1.07	28.7	1.13	10.5	0.41	42.4	1.67	22.2	0.87	19.3	0.76	12.3	0.48	62.4	2.46	8	0.315
1/4"			7.1	0.280	2.43	76.8	3.02	38.4	1.51	38	1.50	10.5	0.41	42.4	1.67	22.2	0.87	19.3	0.76	12.3	0.48	62.4	2.46	8	0.315
3/8"			10.3	0.406	6.42	99	3.9	49.5	1.95	56.5	2.2	1.75	0.69	56.5	2.2	32.0	1.26	22.9	0.90	17.5	0.69	95	3.74	9.7	0.38
1/2"			10.3	0.406	6.42	109.2	4.3	54.6	2.15	56.5	2.2	1.75	0.69	56.5	2.2	32.0	1.26	22.9	0.90	17.5	0.69	95	3.74	9.7	0.38
3/4"			10.3	0.406	6.42	118.4	4.66	59.2	2.33	56.5	2.2	1.75	0.69	56.5	2.2	32.0	1.26	22.9	0.90	17.5	0.69	95	3.74	9.7	0.38
1/8"	BSPP (M)		4.2	0.165	0.93	54.4	2.14	27.2	1.07	28.7	1.13	10.5	0.41	42.4	1.67	22.2	0.87	19.3	0.76	12.3	0.48	62.4	2.46	8	0.315
1/4"			7.1	0.280	2.43	76.8	3.02	38.4	1.51	38	1.50	10.5	0.41	42.4	1.67	22.2	0.87	19.3	0.76	12.3	0.48	62.4	2.46	8	0.315
3/8"			10.3	0.406	6.42	99	3.9	49.5	1.95	56.5	2.2	1.75	0.69	56.5	2.2	32.0	1.26	22.9	0.90	17.5	0.69	95	3.74	9.7	0.38
1/2"			10.3	0.406	6.42	109.2	4.3	54.6	2.15	56.5	2.2	1.75	0.69	56.5	2.2	32.0	1.26	22.9	0.90	17.5	0.69	95	3.74	9.7	0.38
3/4"			10.3	0.406	6.42	118.4	4.66	59.2	2.33	56.5	2.2	1.75	0.69	56.5	2.2	32.0	1.26	22.9	0.90	17.5	0.69	95	3.74	9.7	0.38
1/4"	Seal Face (M)		4.2	0.165	0.93	78.0	3.08	3.08	1.54	38	1.5	10.5	0.41	42.4	1.67	22.2	0.87	19.3	0.76	12.3	0.48	62.4	2.46	8	0.315
1/2"			10.3	0.406	6.42	96.8	3.80	48.4	1.90	56.5	2.2	17.5	0.69	56.5	2.2	32.0	1.26	22.9	0.90	17.5	0.69	95	3.74	9.7	0.38

Ordering Information

EX: SS-BV10	–	TF	4	–
Body Materials	Connection Form	Dimension		Dimension
SS: stainless steel 316	TF: AM-LOK	1: 1/16 in.	3M: 3 mm	None: Inlet /Outlet remain the same
	NT: NPT(M)	2: 1/8 in.	6M: 6 mm	
	FNT: NPT(F)	4: 1/4 in.	8M: 8 mm	
	MV: Face Seal (M)	6: 3/8 in.	10M: 10 mm	
	GS: ISO Straight Thread (M)	8: 1/2 in.	12M: 12 mm	
	FGS: ISO Straight Thread (F)	12: 3/4 in.	18M: 18 mm	
	RT: ISO Tapered Thread (M)			
	FRT: ISO Tapered Thread (F)			

BV11 Series Ball Valves

SS-BV11-TF4

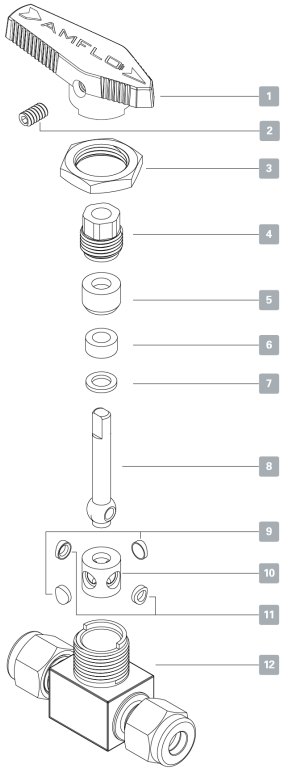

Features

- One-piece Ball & Stem Design
- On/off - service, one-piece ball valve with 2-Way pattern
- Stainless steel structure, allow for panel mouting
- 2-Way straight-through valve allowing bi-directional flow
- One-piece Ball & Stem ensures the alignment of valve stem and orifice
- Maximum Allowable Operating Pressure: 3000 psi (206 bar)
  Maximum Allowable Operating Temperature: 300°F
- Handle type rotary switch, can only be used in the fully open position
- Multi end connection form, Size: 1/16 in. ~ 1/2 in. (3 mm ~ 12 mm)
- Operate with black nylon handle
- Factory Test Condition: 1000 psi compressed air (If the operating pressure is higher than 1000psi, the lock nut should be adjusted to prevent leakage)
- Top-carrying Design, adjustment available when installed on the pipeline

Pressure Temperature Rating

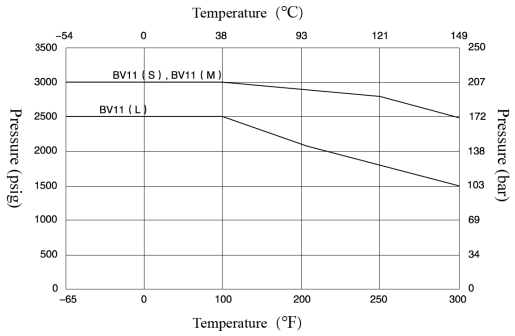

Materials Of Construction

NO.	Component	QTY	Materials
1	Handle	1	Nylon
2	Set Screw	1	SS304
3	Panel Nut	1	SS316
4	Packing Bolt	1	SS316
5	Bonnet	1	SS316
6	Stem Packing	1	PTEF
7	Gasket	1	SS316
8	Ball Stem	1	SS316
9	Seat Disc	2	SS316
10	Seat	1	PFA, PTEF
11	Seat Ring	2	SS316
12	Body	1	ASTM A351 Gr.CFBM SS

Dimensions

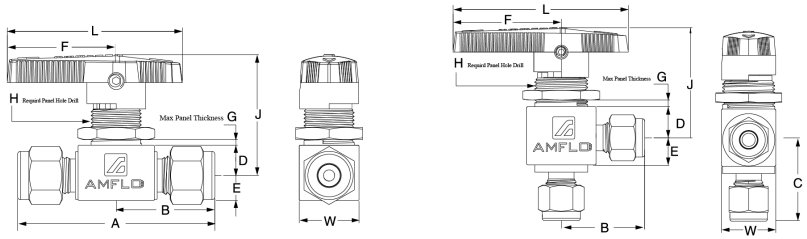

Dimensions

Connection Type	Connection Size	Body Size Mark	Aperture cm	Aperture inch	CV Straightway Valve	CV Angle valve	A mm	A inch	B mm	B inch	C mm	C inch	D mm	D inch	E mm	E inch	F mm	F inch	L mm	L inch	G mm	G inch	H (Diameter) mm	H (Diameter) inch	J mm	J inch	W mm	W inch
AM-LOK (Imperial)	1/16	S	1.3	0.051	0.1	-	42.7	1.68	21.35	0.84	20.6	0.81	8.6	0.34	7.1	0.28	31.0	1.22	50	1.97	6.4	0.25	15.1	0.59	34.5	1.36	17	0.67
	1/8		2.4	0.094	0.2	0.15	51.1	2.01	25.70	1.01	24.6	0.97																
	1/4		3.2	0.126	0.6	0.35	56.1	2.21	28.05	1.10	27.2	1.07																
		M	4.8	0.189	1.4	0.9	60.7	2.39	30.50	1.20	29.7	1.17	11.2	0.44	9.7	0.38	38.9	1.53	63	2.48	4.8	0.19	19.8	0.78	37.3	1.47	19.8	0.78
	3/8				1.5	0.9	65.5	2.58	32.75	1.29	32.8	1.29																
		L	7.1	0.279	6	2	77.5	3.05	38.60	1.52	36.3	1.43	14.2	0.56	14.2	0.56	50.8	2	82.3	3.24	9.5	0.38	28.6	1.13	52.6	2.07	28.4	1.12
	1/2	L			6	4.6	83.12	3.27	41.56	1.63	39.16	1.54	14.2	0.56	14.2	0.56	50.8	2	82.3	3.24	9.5	0.38	28.6	1.13	52.6	2.07	28.4	1.12
AM-LOK (Metric)	3mm	S	2.4	0.094	0.2	0.15	51.1	2.01	25.70	1.01	24.6	0.97	8.6	0.34	7.1	0.28	31.0	1.22	50	1.97	6.4	0.25	15.1	0.59	34.5	1.36	17	0.67
	6mm		3.2	0.126	0.6	0.35	56.1	2.21	28.05	1.10	27.2	1.07																
		M	4.8	0.189	1.4	0.9	60.7	2.39	30.35	1.20	29.7	1.17	11.2	0.44	9.7	0.38	38.9	1.53	63	2.48	4.8	0.19	19.8	0.78	37.3	1.47	19.8	0.78
	8mm				1.5	0.9	62.5	2.46	31.25	1.23	30.5	1.2																
	10mm	L	7.1	0.279	6	2	78.0	3.07	38.90	1.53	36.3	1.43	14.2	0.56	14.2	0.56	50.8	2	82.3	3.24	9.5	0.38	28.6	1.13	52.6	2.07	28.4	1.12
	12mm	L			6	4.6	83.12	3.27	41.56	1.63	39.16	1.54	14.2	0.56	14.2	0.56	50.8	2	82.3	3.24	9.5	0.38	28.6	1.13	52.6	2.07	28.4	1.12
NPT (F)	1/8	S	3.2	0.126	0.5	0.3	41.4	1.63	20.60	0.81	20.6	0.81	8.6	0.34	7.1	0.28	31.0	1.22	50	1.97	6.4	0.25	15.1	0.59	34.5	1.36	17	0.67
		M	4.8	0.189	1.2	0.7	50.8	2.00	25.40	1.00	25.4	1.00	11.2	0.44	9.7	0.38	38.9	1.53	63	2.48	4.8	0.19	19.8	0.78	37.3	1.47	19.8	0.78
	1/4				0.9	0.75	52.3	2.06	26.20	1.03	26.2	1.03	11.2	0.44	9.7	0.38	38.9	1.53	63	2.48	4.8	0.19	19.8	0.78			19.8	0.78
		L	7.1	0.279	3	1.7	63.5	2.50	31.75	1.25	31.75	1.25	14.2	0.56	14.2	0.56	50.8	2	82.3	3.24	9.5	0.38	28.6	1.13	52.6	2.07	28.4	1.12
	3/8				2.6	1.5	63.5	2.50	31.75	1.25	31.75	1.25	14.2	0.56	14.2	0.56	50.8	2	82.3	3.24	9.5	0.38	28.6	1.13	52.6	2.07	28.4	1.12
NPT(M)	1/4	M	4.8	0.189	1.2	0.75	50.8	2.00	25.40	1.00	26.2	1.03	11.2	0.44	9.7	0.38	38.9	1.53	63	2.48	4.8	0.19	19.8	0.78	37.3	1.47	19.8	0.78
NPT(M) to AM-LOK	1/4				1.6	0.75	55.9	2.20	30.5	1.20	26.2																	
ISO 7-1 Tapered Thread (F)	1/4				0.9	-	52.3	2.06	26.15	1.03	26.15																	
	3/8	L	7.1	0.279	2.6	-	63.5	2.50	31.75	1.25	31.75	1.25	14.2	0.56	14.2	0.56	50.8	2	82.3	3.24	9.5	0.38	28.6	1.13	52.6	2.07	28.4	1.12
O-Ring	1/4	S	3.2	0.126	0.6	0.35	44.4	1.75	22.40	0.88	23.9	0.94	11.2	0.44	9.7	0.38	31.0	1.22	50	1.97	3.2	0.13	15.1	0.59	34.5	1.36	19.8	0.78
		M	4.8	0.189	2.4	0.9	47.8	1.88	23.90	0.94			11.2	0.44			38.9	1.53	63	2.48	4.8	0.19	19.8	0.78	37.3	1.47	19.8	0.78
Seal Face (M)	1/4	S	3.2	0.126	0.6	0.35	54.1	2.13	27.05	1.06	27.7	1.09	11.2	0.44			31.0	1.22	50	1.97	3.2	0.13	15.1	0.59	34.5	1.36	19.8	0.78
		M	4.8	0.189	2.4	0.9							11.2	0.44			38.9	1.53	63	2.48	4.8	0.19	19.8	0.78	37.3	1.47	19.8	0.78
	1/2	L	7.1	0.279	6	-	73.2	2.88	36.60	1.44	-	-	14.2	0.56	14.2	0.56	50.8	2	82.3	3.24	9.5	0.38	28.6	1.13	52.6	2.07	38.1	1.5

SS-BV11-TF4-T

Features

- One-piece Ball & Stem Design
- Diverter and On/off - service, one-piece Ball Valve with 3-Way pattern
- Stainless steel structure, allow for panel mouting
- Gases from two pipelines can flow from inlet to outlet in a direction
- One-piece Ball Stem ensures alignment of stem and orifice
- Maximum Allowable Operating Pressure: 1500 psi (103 bar)
- Operating Temperature: 50 °F ~ 150 °F (10 °C ~ 65 °C)
- Handle type rotary switch, can only be used in the fully open position
- Operate with black nylon handle
- Factory Test Condition: 1000 psi compressed air (If the operating pressure is higher than 1000psi, the lock nut should be adjusted to prevent leakage)
- Top-carrying Design, adjustment available when installed on the pipeline

Flow Path Designator

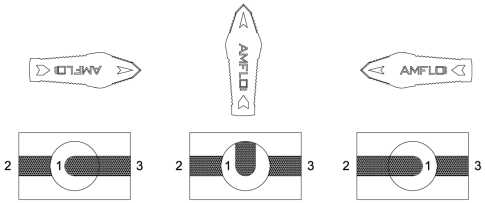

Dimensions

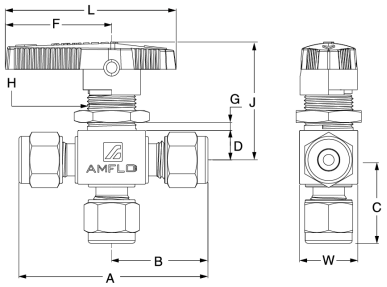

Dimensions

Connection Type	Size	Valve Body Size Mark	Aperture mm	Aperture inch	CV	A mm	A inch	B mm	B inch	C mm	C inch	D mm	D inch	F mm	F inch	L mm	L inch	G mm	G inch	H (Diameter) mm	H (Diameter) inch	J mm	J inch	W mm	W inch
AM-LOK (Imperial)	1/16	S	1.3	0.051	0.08	42.7	1.68	21.35	0.84	20.6	0.81	8.6	0.34	31.0	1.22	50	1.97	6.4	0.25	15.1	0.59	34.5	1.36	17	0.67
	1/8		2.4	0.094	0.15	51.1	2.01	25.70	1.01	24.6	0.97														
	1/4		3.2	0.126	0.35	56.1	2.21	28.05	1.10	27.2	1.07														
		M	4.8	0.189	0.9	60.7	2.39	30.50	1.20	29.7	1.17	11.2	0.44	38.9	1.53	63	2.48	4.8	0.19	19.8	0.78	37.3	1.47	19.8	0.78
	3/8	M				65.5	2.58	32.75	1.29	33.0	1.3														
		L	7.1	0.279	2	73.4	2.89	36.80	1.45	36.3	1.43	14.2	0.56	50.8	2	82.3	3.24	9.5	0.38	28.6	1.13	52.6	2.07	28.4	1.12
	1/2	L			4.6	79.0	3.11	39.5	1.55	39.1	1.54	14.2	0.56	50.8	2.0	82.3	3.24	9.5	0.38	28.6	1.13	52.6	2.07	28.4	1.12
AM-LOK (Metric)	3mm	S	2.4	0.094	0.15	51.1	2.01	25.70	1.01	24.6	0.97	8.6	0.34	31.0	1.22	50	1.97	6.4	0.25	15.1	0.59	34.5	1.36	17	0.67
	6mm		3.2	0.126	0.35	56.1	2.21	27.90	1.10	27.2	1.07														
		M	4.8	0.189	0.9	60.7	2.39	30.50	1.20	29.7	1.17	11.2	0.44	38.9	1.53	63	2.48	4.8	0.19	19.8	0.78	37.3	1.47	19.8	0.78
	8mm				0.8	62.5	2.46	31.25	1.23	30.5	1.2														
	10mm	L	7.1	0.279	2	73.4	2.89	36.80	1.45	36.3	1.43	14.2	0.56	50.8	2	82.3	3.24	9.5	0.38	28.6	1.13	52.6	2.07	28.4	1.12
	12mm	L			4.6	79.0	3.11	39.5	1.55	39.1	1.54	14.2	0.56	50.8	2.0	82.3	3.24	9.5	0.38	28.6	1.13	52.6	2.07	28.4	1.12
NPT (F)	1/8	S	3.2	0.126	0.3	41.4	1.63	20.60	0.81	20.6	0.81	8.6	0.34	31.0	1.22	50	1.97	6.4	0.25	15.1	0.59	34.5	1.36	17	0.67
	1/4	M	4.8	0.189	0.75	52.3	2.06	26.20	1.03	26.2	1.03	11.2	0.44	38.9	1.53	63	2.48	4.8	0.19	19.8	0.78	37.3	1.47	19.8	0.78
		L	7.1	0.279	1.7	63.5	2.50	31.75	1.25	31.75	1.25	14.2	0.56	50.8	2	82.3	3.24	9.5	0.38	28.6	1.13	52.6	2.07	28.4	1.12
	3/8				1.5	63.5	2.50	31.75	1.25	31.75	1.25	14.2	0.56	50.8	2	82.3	3.24	9.5	0.38	28.6	1.13	52.6	2.07	28.4	1.12
NPT(M) to AM-LOK	1/4	M	4.8	0.189	0.8	60.7	2.39	30.50	1.20	26.2	1.03	11.2	0.44	38.9	1.53	63	2.48	4.8	0.19	19.8	0.78	37.3	1.47	19.8	0.78
ISO 7-1 Tapered Thread (F)	1/4				0.75	52.3	2.06	26.15	1.03	26.15															
	3/8	L	7.1	0.279	1.5	63.5	2.50	31.75	1.25	31.75	1.25	14.2	0.56	50.8	2	82.3	3.24	9.5	0.38	28.6	1.13	52.6	2.07	28.4	1.12
Seal Face (M)	1/4	S	3.2	0.126	0.35	54.1	2.13	27.05	1.06	27.7	1.09	11.2	0.44	31.0	1.22	50	1.97	3.2	0.13	15.1	0.59	34.5	1.36	19.8	0.78
		M	4.8	0.189	0.9							11.2	0.44	38.9	1.53	63	2.48	4.8	0.19	19.8	0.78	37.3	1.47	19.8	0.78

Ordering Information

EX: SS-BV11 – TF 4 – –

Body Materials	Connection Form	Dimension		Dimension	Options
SS: stainless steel 316	TF: AM-LOK	1: 1/16 in.	3M: 3 mm	None: Inlet /Outlet remain the same	None : Standard
	NT: NPT(M)	2: 1/8 in.	6M: 6 mm		A : Angle Valve
	FNT: NPT(F)	4: 1/4 in.	8M: 8 mm		T : Tee Valve
	MV: Face Seal (M)	6: 3/8 in.	10M: 10 mm		
	GS: ISO Straight Thread (M)	8: 1/2 in.	12M: 12 mm		
	FGS: ISO Straight Thread (F)	12: 3/4 in.	18M: 18 mm		
	RT: ISO Tapered Thread (M)				
	FRT: ISO Tapered Thread (F)				

BV12 Series Ball Valves

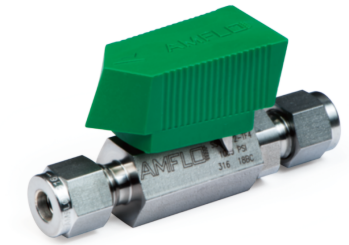

SS-BV12-TF4

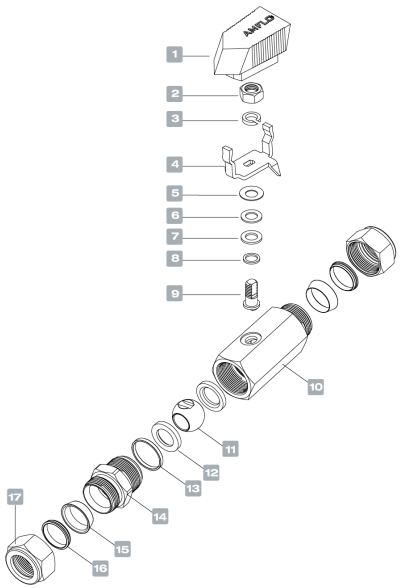

Features

- Blow-out proof valve stem
- Stainless steel structure
- Maximum Allowable Operating Pressure : 1000 psi (69 bar)
- Maximum Allowable Operating Temperature : 80°C (176°F)
- Circulation Volume (CV) : 1.25 ~ 12.65
- Size : 1/4 in.~ 3/4 in. & 6 mm ~ 20 mm

Pressure Temperature Rating

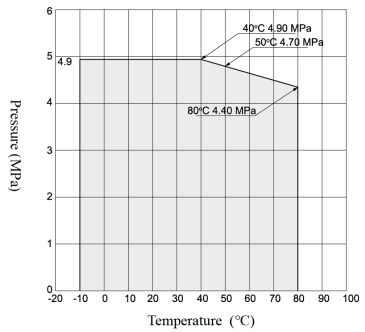

Materials Of Construction

NO.	Component	QTY	Materials
1	Knob	1	ABS
2	Nut	1	SS304
3	Spring Gasket	1	SS304
4	Seat	1	SS304
5	Butterfly Spring Gasket	1	SS304
6	Plain Gasket	1	SS304
7	Stem Packing	1	PTFE
8	Stem Sealing Ring	1	PTFE
9	Stem	1	SS316
10	Valve Body	1	SS316
11	Ball Body	1	SS316
12	Seat	2	Improved PTFE
13	Gasket	1	PTFE
14	End Connection	1	SS316
15	Front Female	2	SS316
16	Back Female	2	SS316
17	Nut	2	SS316

Dimensions

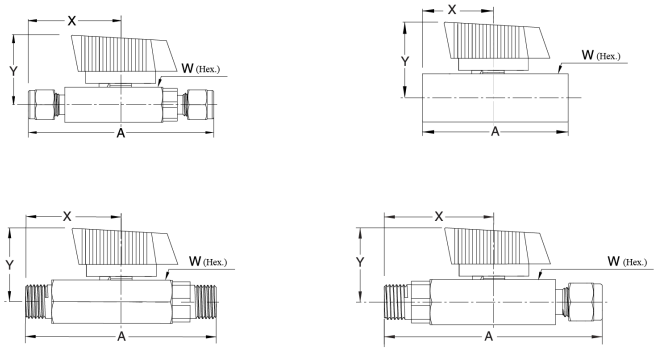

Dimensions

Connection		Valve Type	Body Materials	CV	Aperture		A		X		Y		W Hex.
Type	Size				mm	inch	mm	inch	mm	inch	mm	inch	mm
AM-LOK (Imperial)	1/4	BV12	SS316	1.25	4.8	0.19	73	2.87	32.7	1.29	30	1.18	17.5
	3/8			2.5	7.2	0.28	80	3.15	35	1.38	32	1.26	22
	1/2			9.25	9.2	0.36	90	3.54	41.5	1.63	39	1.54	25
	3/4			12.65	12.5	0.49	107	4.21	47.5	1.87	42.7	1.68	32
AM-LOK (Metric)	6mm	BV12	SS316	1.25	4.8	0.19	73	2.87	32.7	1.29	30	1.18	17.5
	8mm			1.35	4.8	0.19	73	2.87	32.7	1.29	32.2	1.27	17.5
	10mm			2.6	7.2	0.28	80	3.15	35	1.38	32	1.26	22
	12mm			9.25	9.2	0.36	90	3.54	41.5	1.63	39	1.54	25
NPT (F)	1/4	BV12	SS316	1.35	5	0.2	57	2.24	24.4	0.96	32	1.26	22
	3/8			2.6	7	0.28	57	2.24	24.4	0.96	32	1.26	22
	1/2			9.25	9	0.35	75	2.95	31.5	1.24	39	1.54	25
	3/4			12.65	12.5	0.49	59	2.32	29.5	1.16	44	1.73	32
NPT (M)	1/4	BV12	SS316	1.35	5	0.2	64	2.52	29	1.14	30	1.18	17.5
	3/8			2.5	7	0.28	66	2.60	26.9	1.06	32	1.26	22
	1/2			9.25	9.2	0.36	84.3	3.32	38.5	1.52	39	1.54	25
NPT(M) to AM-LOK	1/4	BV12	SS316	1.25	5	0.2	67.4	2.65	32.7	1.29	30	1.18	17.5
	3/8			2.5	7	0.28	74	2.91	35	1.38	32	1.26	22
	1/2			9.25	9.2	0.36	87.2	3.43	41.5	1.63	39	1.54	25
	3/4			12.65	12.5	0.49	103.5	4.07	47.5	1.87	42.7	1.68	32

Ordering Information

EX: SS-BV12 – TF 4 –

Body Materials	Connection Form	Dimension		Dimension
SS: stainless steel 316	TF: AM-LOK	1: 1/16 in.	3M: 3 mm	None: Inlet /Outlet remain the same
	NT: NPT(M)	2: 1/8 in.	6M: 6 mm	
	FNT: NPT(F)	4: 1/4 in.	8M: 8 mm	
	GS: ISO Straight Thread (M)	6: 3/8 in.	10M: 10 mm	
	FGS: ISO Straight Thread (F)	8: 1/2 in.	12M: 12 mm	
	RT: ISO Tapered Thread (M)	12: 3/4 in.	18M: 18 mm	
	FRT: ISO Tapered Thread (F)			

BV41 Series Ball Valves

SS-BV41-FNT2

Features

- Maximum Operating Pressure: 2500 psi (172 bar)
- Operating Temperature : 10°C ~ 65°C (50°F ~ 150°F)
- One-piece body structure
- Handle type rotary switch, can only be used in the fully open position
- Connection Form: NPT
- Fluid can be transferred from a single inlet to multiple outlets, or from multiple inlets to a single outlet
- Allow for panel mouting
- Top-carrying design allowing adjustment available when installed on the pipeline
- Allows bi-directional flow for easy cleaning and purification
- Factory Test Condition: 1000 psi compressed air (If the operating pressure is higher than 1000psi, the locking nut should be adjusted to prevent leakage)

Flow Path Designator

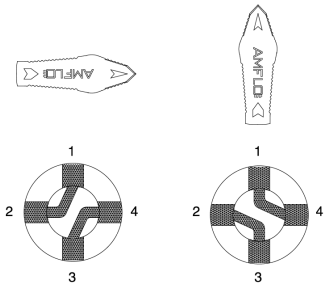

Dimensions

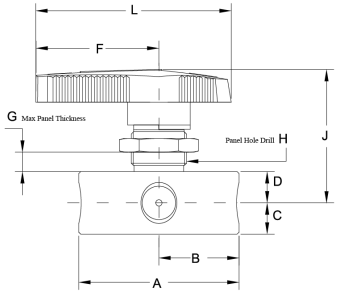

Series	Inlet/Outlet Connection	Size																	
		A		B		C		D		F		L		G		H		J	
		mm	inch	mm	inch	mm	inch	mm	inch	mm	inch	mm	inch	mm	inch	mm	inch	mm	inch
SS-BV41-FNT2	1/8” Female NPT	41	1.61	20.5	0.81	10	0.39	10	0.39	31	1.22	50	1.97	6.35	0.25	14.5	0.57	34.3	1.35
SS-BV41-FNT4	1/4” Female NPT	41	1.61	20.5	0.81	10	0.39	10	0.39	31	1.22	50	1.97	6.35	0.25	14.5	0.57	34.3	1.35

Ordering Information

EX: SS	–	BV41	–	FNT		2
Body Materials		Structure Form		Connection Form		Dimension
SS: stainless steel 316		BV41: cross		FNT: NPT(F)		2: 1/8 in.
						4: 1/4 in.

BV51 Series Ball Valves

SS-BV51-FNT2

Features

- Maximum Operating Pressure: 2500 psi (172 bar)
- Operating Temperature: 10°C ~ 65°C(50°F ~ 150°F)
- One-piece Body Structure could prevent the leakage efficiently
- Handle type rotary switch, can only be used in the fully open position
- Connection Form: NPT
- Fluid can be transferred from a single inlet to multiple outlets, or from multiple inlets to a single outlet
- Allow for panel mouting
- Top-carrying Design allowing adjustment available when installed on the pipeline
- Factory Test Condition: 1000 psi compressed air (If the operating pressure is higher than 1000psi, the locking nut should be adjusted to prevent leakage)

Flow Path Designator

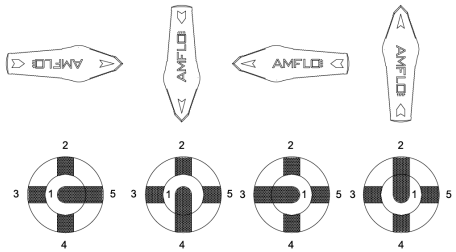

Dimensions

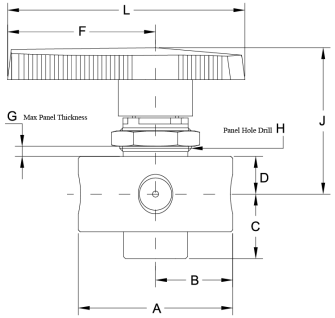

Series	Inlet/Outlet Connection	Size																	
		A		B		C		D		F		L		G		H		J	
		mm	inch	mm	inch	mm	inch	mm	inch	mm	inch	mm	inch	mm	inch	mm	inch	mm	inch
SS-BV51-FNT2	1/8” Female NPT	41	1.61	20.5	0.81	19.7	0.78	10	0.4	39.3	1.54	63	2.48	4.1	0.16	19	0.75	39	1.54
SS-BV51-FNT4	1/4” Female NPT	41	1.61	20.5	0.81	19.7	0.78	10	0.4	39.3	1.54	63	2.48	4.1	0.16	19	0.75	39	1.54

Ordering Information

EX: SS	–	BV51	–	FNT		2
Body Materials		Structure Form		Connection Form		Dimension
SS: stainless steel 316		BV41: 5-way		FNT: NPT(F)		2: 1/8 in.
						4: 1/4 in.

NV10 Series Needle Valves

SS-NV10-TF4

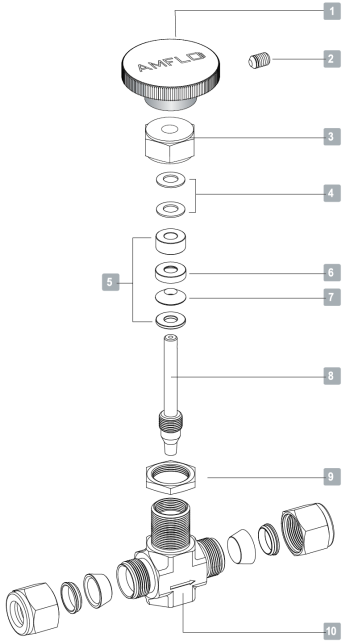

Features

- Maximum Operating Pressure: 5000 psi (345 bar)
- Valve Stem Types: V-ring, R-ring, K-ring
- Valve Interface Forms: NPT threads, AM-LOK tube fittings
- Specifications for Ferrule Fittings: 3mm, 6mm, 8mm, 10mm, 12mm 1/8", 1/4", 3/8", 1/2", 3/4"
- Valve Standard Forms Available: straight pattern and angle pattern
- Valve Standard Operation: Handwheel adjustment, also available in Lever adjustment
- Panel-mounting is allowed
- Factory Test Conditions: 1000 psi compressed air (For use above 1000 psi, adjust the locking nut to prevent leakage)

Pressure Temperature Rating

Body Materials	Stem Type	Rated Value	
		Temperature	Pressure
SS316	All Stainless Steels stems	-51°C ~ 230°C (-60°F ~ -446°F)	5000 psi
	PCTFE	-46°C ~ 93°C (-51°F ~ -200°F)	5000 psi

Materials Of Construction

No.		Component	QTY	Materials
1		Handle	1	Nylon
2		Set Screw	1	SS304
3		Locknut	1	SS316
4		Butterfly Type Spring Gasket	2	SS304
5		Bonnet	2	SS316
6		Upper Packing	1	PTFE
7		Lower Packing	1	PTFE
8	A	R-ring Stem	1	SS316
	B	V-ring Non-Rotating Stem	1	SS316
	C	K-ring Soft-seal Stem	1	SS316 + PCTFE
9		Panel nut	2	SS316
10		Body	1	SS316

Stem Options

R-ring Stem:

Used when a degree of flow control is required.

V-ring Stem:

Standard stem head for on/off operations in general liquid and gas applications.

K-ring Stem:

Soft-seat stem head requiring lower installation torque than metallic stem heads; optimal for clean gaseous high-pressure applications with a maximum allowable operating temperature of 200°F (93°C).

Dimensions

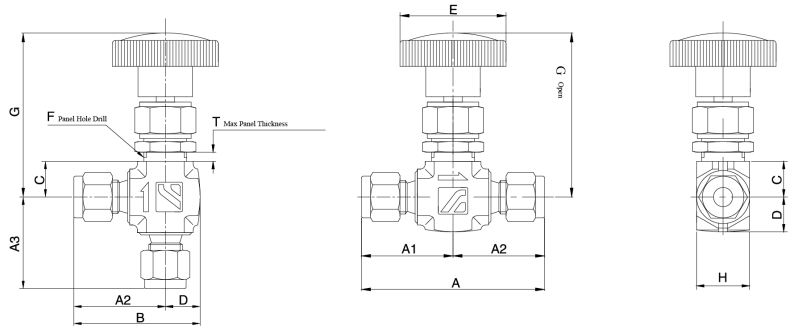

Dimensions

Purchase Order	Aperture	CV	Port Connection Inlet	Port Connection Outlet	A mm	A inch	A1 mm	A1 inch	A2 mm	A2 inch	A3 mm	A3 inch	B mm	B inch	C mm (inch)	D mm (inch)	E mm (inch)	F mm (inch)	G mm (inch)	H mm (inch)	T max mm (inch)
NV10	2.0 (0.08)	0.09	3 mm AM-LOK	3 mm AM-LOK	50.8	2.00	25.4	1.00	25.4	1.00	25.4	1.00	33.4	1.31	11.2 (0.44 inch)	8.5 (0.33 inch)	25.0 (0.98 inch)	12.0 (0.47 inch)	57.5 (2.26 inch)	13.0 (0.51 inch)	5.0 (0.2 inch)
NV10			1/8 in. AM-LOK	1/8 in. AM-LOK	50.8	2.00	25.4	1.00	25.4	1.00	25.4	1.00	33.4	1.31							
NV10			1/8 in. MNPT	1/8 in. AM-LOK	45.3	1.78	19.9	0.78	25.4	1.00	19.9	0.78	33.4	1.31							
NV10	4.4 (0.172)	0.37	1/4 in. AM-LOK	1/4 in. AM-LOK	60.4	2.38	30.2	1.18	30.2	1.18	30.2	1.18	41.7	1.64	11.8 (0.47 inch)	11.5 (0.45 inch)	35.1 (1.38 inch)	15.0 (0.59 inch)	57.5 (2.26 inch)	17.5 (0.69 inch)	4.0 (0.16 inch)
NV10			6 mm AM-LOK	6 mm AM-LOK	60.4	2.38	30.2	1.18	30.2	1.18	30.2	1.18	41.7	1.64							
NV10			8 mm AM-LOK	8 mm AM-LOK	62.0	2.44	31.0	1.22	31.0	1.22	31.0	1.22	42.5	1.67							
NV10			1/8 in. FNPT	1/8 in. FNPT	41.2	1.62	20.6	0.81	20.6	0.81	20.6	0.81	32.1	1.26							
NV10			1/8 in. MNPT	1/8 in. MNPT	53.5	2.10	26.8	1.10	26.0	1.02	26.0	1.02	38.3	1.50							
NV10			1/4 in. MNPT	1/4 in. MNPT	53.5	2.10	26.8	1.10	26.0	1.02	26.0	1.02	38.3	1.50							
NV10			1/4 in. MNPT	1/4 in. AM-LOK	57.0	2.24	26.8	1.10	30.2	1.18	26.8	1.00	41.7	1.64							
NV10	6.4 (0.25)	0.73	3/8 in. AM-LOK	3/8 in. AM-LOK	69.6	2.74	34.8	1.37	34.8	1.37	34.8	1.37	48.9	1.92	15.0 (0.59 inch)	14.0 (0.55 inch)	47.5 (1.87 inch)	20.0 (0.79 inch)	70.5 (2.78 inch)	21.5 (0.85 inch)	6.5 (0.26 inch)
NV10			10 mm AM-LOK	10 mm AM-LOK	70.2	2.76	35.1	1.38	35.1	1.38	35.1	1.38	49.1	1.93							
NV10			1/2 in. AM-LOK	1/2 in. AM-LOK	74.4	2.93	37.2	1.47	37.2	1.47	37.2	1.47	51.2	2.02							
NV10			12 mm AM-LOK	12 mm AM-LOK	74.4	2.93	37.2	1.47	37.2	1.47	37.2	1.47	51.2	2.02							
NV10			1/4 in. FNPT	1/4 in. FNPT	55.0	2.17	27.5	1.08	27.5	1.08	27.5	1.08	41.5	1.63							
NV10			3/8 in. MNPT	3/8 in. MNPT	57.0	2.24	28.5	1.12	28.5	1.12	28.5	1.12	45.0	1.67							
NV10			1/4 in. MNPT	1/4 in. MNPT	56.0	2.20	28.5	1.12	27.5	1.08	27.5	1.08	42.5	1.63							
NV10			3/8 in. MNPT	3/8 in. AM-LOK	63.3	2.49	28.5	1.12	34.8	1.37	28.5	1.12	48.8	1.92							
NV10	9.5 (0.375)	1.8	3/4 in. AM-LOK	3/4 in. AM-LOK	97.0	3.82	48.5	1.91	48.5	1.91	48.5	1.91	68.5	2.70	19.5 (0.77 inch)	20.0 (0.79 inch)	70.0 (2.76 inch)	26.0 (1.02 inch)	99.3 (3.91 inch)	30.2 (1–3/16 inch)	15.0 (0.59 inch)
NV10			3/8 in. FNPT	3/8 in. FNPT	76.2	3.00	38.1	1.50	38.1	1.50	38.1	1.50	58.1	2.29							
NV10			1/2 in. FNPT	1/2 in. FNPT	76.2	3.00	38.1	1.50	38.1	1.50	38.1	1.50	58.1	2.29							
NV10			1/2 in. MNPT	1/2 in. MNPT	76.2	3.00	38.1	1.50	38.1	1.50	38.1	1.50	58.1	2.29							
NV10			1/2 in. MNPT	1/2 in. FNPT	76.2	3.00	38.1	1.50	38.1	1.50	38.1	1.50	58.1	2.29							

Ordering Information

EX: SS-NV10 – TF 4 – – – –

Body Materials	Connection Form	Dimension		Dimension	Stem Type	Structure Identification	Gamepad Type
SS: stainless steel 316	TF: AM-LOK	1: 1/16 in.	3M: 3 mm	None: Inlet /Outlet remain the same	None: V-ring	None: Straightway Valve	None: Handwheel
	NT: NPT(M)	2: 1/8 in.	6M: 6 mm		K: K-ring	A: Angle	B: Handle
	FNT: NPT(F)	4: 1/4 in.	8M: 8 mm		R: R-ring		
	MV: Face Seal (M)	6: 3/8 in.	10M: 10 mm				
	GS: ISO Straight Thread (M)	8: 1/2 in.	12M: 12 mm				
	FGS: ISO Straight Thread (F)	12: 3/4 in.	18M: 18 mm				
	RT: ISO Tapered Thread (M)						
	FRT: ISO Tapered Thread (F)						

DV10 Series Diaphragm Valves

SS-DV10-FNT4

Features

- Suitable for high-purity
- SS316L Body
- Knob with switch indication
- Maximum inlet pressure of 3500 psi
- Diaphragm-based hard seal, low leakage rate
- High durability
- Tested with Helium gas

Specifications

- CV: 0.15
- Valve Seat: PCTFE
- Diaphragm: SS316L, HASTELLOY®C-22
- Temperature Range: -10 °C ~ 80 °C (14 °F ~ 176 °F)
- Body Leakage Rate: $5x10^{-9}$ atm cc/sec He
- Seat Leakage Rate: $5x10^{-9}$ atm cc/sec He
- Design Validation: 150% of maximum operating pressure
- Design Burst: 400% of maximum operating pressure

Product Development Exhibition

SS-DV10-NT4-FNT4

SS-DV10-TF4

Dimensions

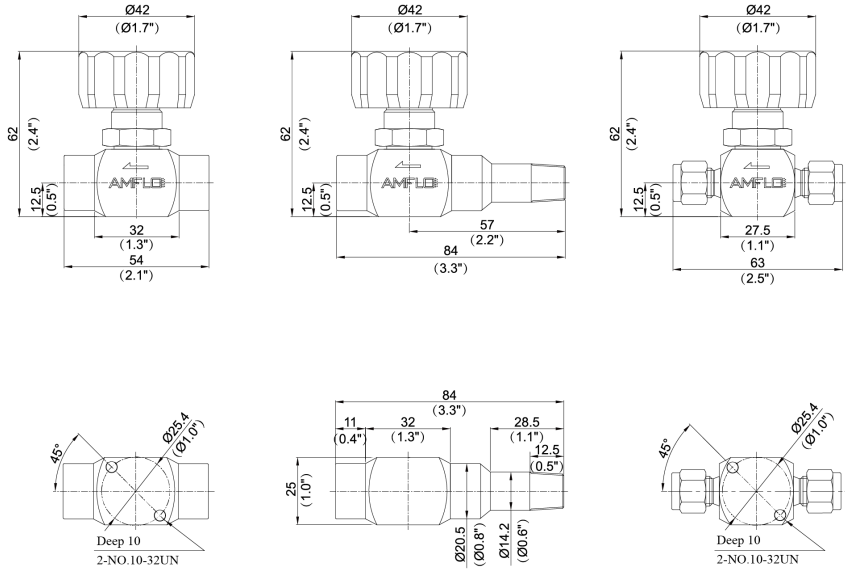

Ordering Information

Model Number	Inlet Connection	Outlet Connection	CV
SS-DV10-TF4	1/4" AM-LOK	1/4" AM-LOK	0.15
SS-DV10-TF6M	6mm AM-LOK	6mm AM-LOK	0.15
SS-DV10-FNT4	1/4" NPT(F)	1/4" NPT(F)	0.15
SS-DV10-NT4-FNT4	1/4" NPT(M)	1/4" NPT(F)	0.15

DV11 Series Diaphragm Valves

SS-DV11-FNT4

Features

- Suitable for high-purity gases
- SS316L Body
- Knob with switch indication
- Maximum inlet pressure of 3500 psi
- Diaphragm-based hard seal, low leakage rate
- High durability
- Tested with helium gas

Specifications

- CV: 0.15
- Valve Seat: PCTFE
- Diaphragm: SS316L, HASTELLOY®C-22
- Temperature Range: -10 °C ~ 80 °C (14 °F ~ 176 °F)
- Body Leakage Rate: $5x10^{-9}$atm cc/sec He
- Seat Leakage Rate: $5x10^{-9}$atm cc/sec He
- Design Validation: 150% of maximum operating pressure
- Design Burst: 400% of maximum operating pressure

Product Development Exhibition

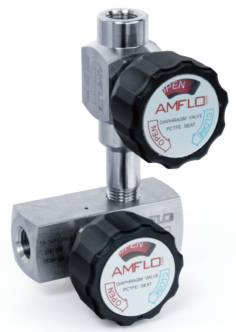

Blowout With Diaphragm Valve

Blowout With Ball Valve

Dimensions

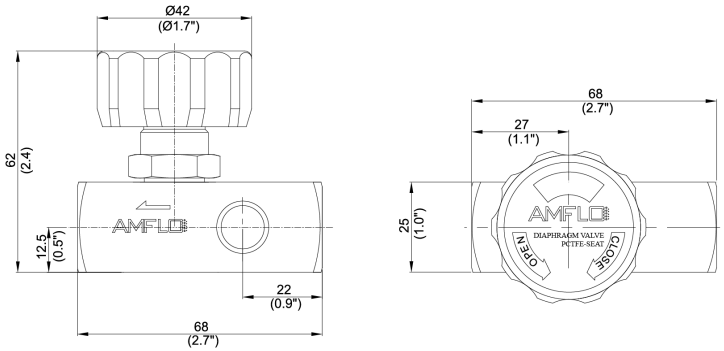

Ordering Information

Model Number	Inlet Connection	Outlet Connection	CV
SS-DV11-FNT4	1/4" NPT(F)	1/4" NPT(F)	0.15

DV12 Series Diaphragm Valves

SS-DV12-TF8

Features

- Suitable for high-purity gases
- SS316 Body
- Hand-wheel operated switch
- Maximum inlet pressure of 3500 psi
- Diaphragm-based hard seal, low leakage rate
- High durability
- Tested with ammonia gas

Specifications

- CV: 0.15
- Valve Seat: PCTFE
- Diaphragm: SS316L, HASTELLOY®C-22
- Temperature Range: -10 °C ~ 80 °C (14 °F ~ 176 °F)
- Body Leakage Rate: $5x10^{-9}$atm cc/sec He
- Seat Leakage Rate: $5x10^{-9}$atm cc/sec He
- Design Validation: 150% of maximum operating pressure
- Design Burst: 400% of maximum operating pressure

Product Development Exhibition

SS-DV312-FNT4-TF8

Dimensions

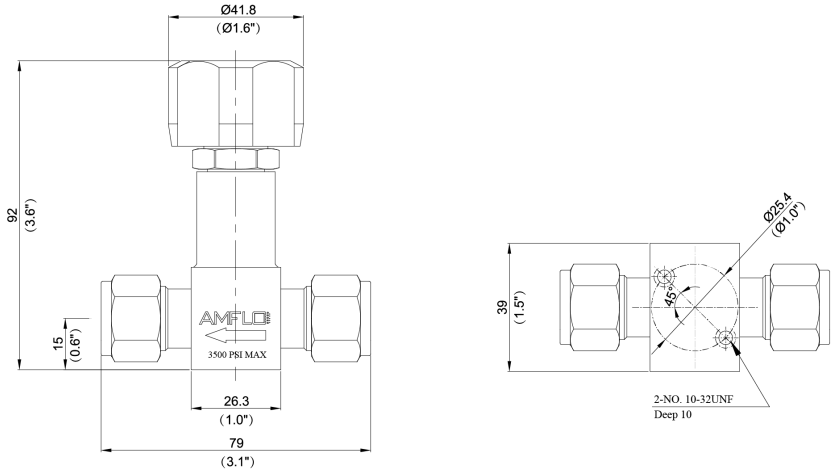

Ordering Information

Model Number	Inlet Connection	Outlet Connection	CV
SS-DV12-TF8	1/2" AM-LOK	1/2" AM-LOK	0.15
SS-DV312-FNT4-TF8	1/4" NPT(F)	1/2" AM-LOK	0.15

RV10, 11, 12 Series Relief Valves

SS-RV12-TF4-1500

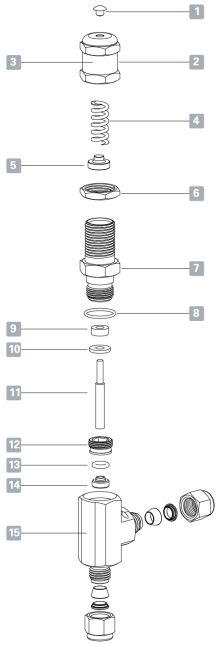

Features

- SS316 body Operating
- Max Working Pressure: 6000 psi
- Pressure Range: 50 psi ~ 6000 psi (3.50 ~ 414 bar)
- Sizes Available: 1/4 in. 6 mm
- Interchangeable colored springs for different pressure settings
- Compatible with all pipe threads and AM-LOK fittings
- For each pressure setting range
  springs are painted in different colors for differentiation

Nominal Open Pressure Range

Series	psig	bar	Spring Identification	Color
RV12	50-350	3.4-24	A	White
RV12	350-650	24-51.5	B	Blue
RV12	650-1500	51.5-103	C	Gold
RV12	1500-2250	103-155	D	Jade Green
RV12	2250-3000	155-206	E	Green
RV12	3000-4000	206-275	F	Red
RV12	4000-5000	275-344	G	Silver
RV12	5000-6000	344-413	H	Black

Materials of Construction

No.	Component	QTY	Material
1	Cover	1	PTFE
2	Cap Label	1	Polyvinyl acetate (PVA)
3	Adjustment Cap	1	SS316
4	Spring	1	SS302 , 17-7PH
5	Lower Spring Support Seat	1	SS316
6	Locknut	1	SS316
7	Valve Cap	1	SS316
8	O-ring Seal	1	Fluorocarbon Rubber (FKM)
9	Square Seal Ring	1	Fluorocarbon Rubber (FKM)
10	Locator Ring	1	SS316
11	Valve Stem	1	SS316
12	Valve Core	1	SS316
13	O-ring Seal	1	Fluorocarbon Rubber (FKM)
14	Circular Ring	1	SS316
15	Valve Body	1	SS316

SS-RV11-NT4-FNT4-500

SS-RV10-NT4-FNT4-150

Dimensions

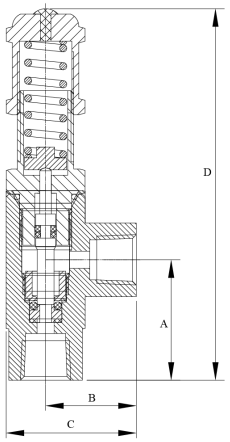

Dimensions

Series	Connection/Size		Dimension							
	Inlet	Outlet	A		B		C		D	
			mm	in.	mm	in.	mm	in.	mm	in.
RV12	1/4 AM-LOK	1/4 AM-LOK	37	1.45	39	1.53	50	1.97	96.0	3.78
RV12	6mm AM-LOK	6mm AM-LOK	37	1.45	39	1.53	50	1.97	96.0	3.78
RV12	1/4 Male NPT	1/4 Female NPT	32	1.26	30	1.18	40	1.57	88.6	3.49
RV12	1/4 Male NPT	1/4 AM-LOK	32	1.26	39	1.53	50	1.97	88.6	3.49

Ordering Information

EX:SS	–	R12	–	TF	4	–		–	1000	–
Body Materials		Valve Series		Connection Form	Dimension		Dimension		Identification	Seal Materials
SS: 316		RV10		TF: AM-LOK	4: 1/4 in.		None: Inlet/outlet remain the same		50-6000 psi	Blank: Fluorocarbon Rubber (FKM)
		RV11		NT: NPT(M)	8: 1/2 in.				e.g., SS-RV12-TF4-1000	BU: Nitrile Rubber
		RV12		FNT: NPT(F)	6M: 6 mm				indicates calibration to 1000 psi	EP: Ethylene Propylene Rubber
				RT: ISO Tapered Thread (M)	12M: 12 mm					NE: Chloroprene Rubber (CR)
				FRT: ISO Tapered Thread (F)						

CV10 Series Check Valves

SS-CV10-NT4

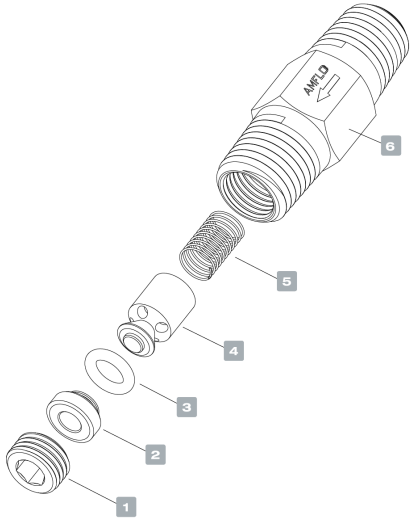

Features

- SS316 Body
- Operating Pressure: 3000 psi(206 bar)
- One-piece Design
- NPT M&F Threaded Connection

O-ring

Materials	Temperature Rating °F(°C)
Nitrile Rubber (NBR)	-10 to 250(-23 - 121)
Ethylene Propylene Rubber	-50 to 300(-45 - 148)
Fluoroelastomer (FKM)	-10 to 375(-23 - 190)
Perfluoroelastomer (FFKM)	-15 to 500(-26 - 260)
Chloroprene Rubber (CR)	-40 to 250(-40 - 121)

Pressure Temperature Rating

Materials	SS316
Temperature °F(°C)	Operating Pressure psi(bar)
-10(-23) to 100(37)	3000(206)
200(93)	2575(177)
250(121)	2450(168)
300(148)	2325(160)
375(190)	2185(150)

Opening and Reclosing Pressure

Opening Pressure (Nominal)	Opening Pressure Range	Reclosing Pressure Range
psi (bar)	psi (bar)	psi (bar)
1/3(0.03)	Max 3 (0.2)	Back Pressure 6 to 20(0.41 to 1.3)
1(0.06)	Max 4 (0.27)	Back Pressure 5 to 20(0.34 to 1.3)
10(0.68)	7 to 13(0.48 - 0.89)	Back Pressure 3 to 10(0.2 to 0.68)
25(1.7)	21 to 29(1.4 - 1.9)	Inlet Pressure ≥ 5(0.34)

Materials of Construction

No.	Component	QTY	Materials
1	Lock Screw	1	SS316
2	O-Ring Seal Seat	1	SS316
3	O-Ring Seal	1	FKM
4	Poppet	1	SS316
5	Spring	1	SS302
6	Body	1	SS316

Dimensions

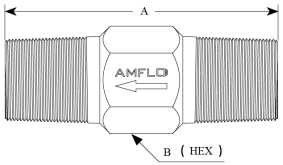

Connection Inlet/Outlet	Size	Size		
		A		B
		mm	inch	inch
NPT(F)	1/4	61.0	2.4	3/4
	1/2	94.0	3.7	11/16
NPT(M)	1/4	41.0	1.61	9/16
	1/2	58.0	2.28	7/8
NPT(F/M)	1/4	58.0	2.28	3/4
NPT(M/F)	1/4	44.5	1.75	3/4
	1/2	72.0	2.83	11/16
BSPT(F)	1/4	61.0	2.54	3/4
BSPT(M)	1/2	41.0	1.61	9/16

Ordering Information

EX:SS-CV10	– NT	4	– 1/3	–
Body Materials	Connection Form	Dimension	Opening Pressure	Sealing Materila
SS: 316	NT: NPT(M)	4: 1/4 in.	1/3 psi	None: Fluorocarbon Rubber(FKM)-standard
	FNT: NPT(F)	8: 1/2 in.	1 psi	BU: Nitrile Rubber
	RT: ISO Tapered Thread(M)		5 psi	EP: Ethylene Propylene Rubber(EPDM)
	FRT: ISO Tapered Thread(F)		10 psi	NE: Chloroprene Rubber(CR)
			25 psi	KZ: Perfluoroelastomer(FFKM)

CV11 Series Check Valves

SS-CV11-TF8

Features

- SS316 Body
- Operating Pressure: 3000 psi(206 bar)
- Compact Design
- AM-LOK, NPT threads (F/M), and AFS face-sealed connection end

O-ring

O-ring Materials	Temperature Rating °F(°C)
Nitrile Rubber (NBR)	-10 to 250(-23 - 121)
Ethylene Propylene	-50 to 300(-45 - 148)
Fluoroelastomer (FKM))	-10 to 375(-23 - 190)
Perfluoroelastomer(FFKM)	-15 to 500(-26 - 260)
Chloroprene Rubber (CR)	-40 to 250(-40 - 121)

Pressure Temperature Rating

	1/8-3/8 in. 3-10 mm	1/2-1 in. 12-25 mm
Materials	SS316	
°F(°C)	psi (bar)	
-10(-23) to 100(37)	3000(206)	2000(137)
200(93)	2575(177)	1715(118)
250(121)	2450(168)	1630(112)
300(148)	2325(160)	1545(106)
375(190)	2185(150)	1450(99.9)

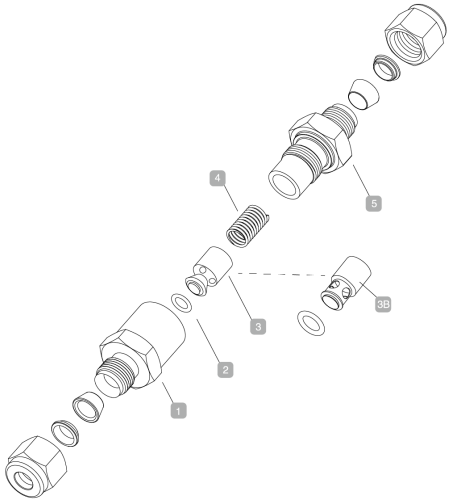

Opening and Reclosing Pressure

Opening Pressure (Nominal)	Opening Pressure Range	Reclosing Pressure Range
psi (bar)	psi (bar)	psi (bar)
1/3(0.02)	Max 3 (0.2)	Max Back Pressure 6(0.40)
1(0.06)	Max 4 (0.27)	Max Back Pressure 6(0.41)
5(0.34)	3 to 9(0.20 - 0.62)	Max Back Pressure 2(0.2)
10(0.68)	7 to 15(0.48- 1.0)	Inlet Pressure ≥ 3(0.2)
25(1.7)	20 to 30(1.3- 2.0)	Inlet Pressure ≥ 17(11)

Materials of Construction

No.		Component	QTY	Materials
1		Body	1	SS316
2		O-Ring Seal Seat	1	FKM
3, 3B		Poppet	1	SS316
4	A	1/3 psi spring	1	SS302
	B	3 psi spring	1	SS302
	C	10 psi spring	1	SS302
	D	25 psi spring	1	SS302
5		Lock Nut	1	SS316

Dimensions

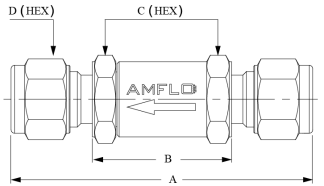

Dimensions

Series	Connection/Size		Cv	A		A		A		A	
	Inlet	Outlet		mm	in.	mm	in.	mm	in.	mm	in.
CV11	1/8 in. AM-LOK	1/8 in. AM-LOK	0.1	56.0	2.20	25.3	1.00	15.88	5/8	11.11	7/16
CV11	1/4 in. AM-LOK	1/4 in. AM-LOK	0.47	60.5	2.38	25.0	0.98	15.88	5/8	14.28	9/16
CV11	6 mm AM-LOK	6 mm AM-LOK	0.47	60.5	2.38	25.0	0.98	15.88	5/8	14.00	
CV11	3/8 in. AM-LOK	3/8 in. AM-LOK	1.47	63.5	2.50	24.9	0.98	17.46	11/16	17.46	11/16
CV11	8 mm AM-LOK	8 mm AM-LOK	1.47	63.3	2.49	24.9	0.98	17.5	11/16	16.00	
CV11	10 mm AM-LOK	10 mm AM-LOK	1.68	64.0	2.52	24.9	0.98	17.46	11/16	19.00	
CV11	1/2 in. AM-LOK	1/2 in. AM-LOK	1.68	77.0	3.03	32.6	1.28	23.8	15/16	22.23	7/8
CV11	12 mm AM-LOK	12 mm AM-LOK	1.68	77.0	3.03	32.8	1.28	23.8	15/16	22.00	
CV11	3/4 in. AM-LOK	3/4 in. AM-LOK	4.48	88.5	3.48	44.4	1.75	28.6	1–1/8	28.60	1–1/8
CV11	1 in. AM-LOK	1 in. AM-LOK	4.48	120	4.72	67.2	2.65	34.9	1–3/8	38.10	1–1/2
CV11	1/8 in. NPT (F)	1/8 in. NPT (F)	0.1	44.0	1.73	25.4	1.00	15.88	5/8		
CV11	1/4 in. NPT (F)	1/4 in. NPT (F)	0.47	52.5	2.07	28.0	1.10	19.05	3/4		
CV11	3/8 in. NPT (F)	3/8 in. NPT (F)	1.47	51.5	2.03	34.1	1.34	22.23	7/8		
CV11	1/2 in. NPT (F)	1/2 in. NPT (F)	1.68	76.5	3.01	43.4	1.71	28.6	1–1/8		
CV11	3/4 in. NPT (F)	3/4 in. NPT (F)	4.48	86.0	3.39	56.0	2.20	34.9	1–3/8		
CV11	1 in. NPT (F)	1 in. NPT (F)	4.48	107	4.21	73.0	2.87	41.28	1–5/8		
CV11	1/8 in. NPT (M)	1/8 in. NPT (M)	0.1	44.3	1.74	24.9	0.98	15.88	5/8		
CV11	1/4 in. NPT (M)	1/4 in. NPT (M)	0.47	55.7	2.19	25.0	0.98	19.05	3/4		
CV11	3/8 in. NPT (M)	3/8 in. NPT (M)	1.47	53.1	2.09	24.9	0.98	17.46	11/16		
CV11	1/2 in. NPT (M)	1/2 in. NPT (M)	1.68	70.4	2.77	32.6	1.28	23.8	15/16		
CV11	1/4 in. Face Seal (M)	1/4 in. Face Seal (M)	0.47	56.4	2.22	24.9	0.98	15.88	5/8		
CV11	1/2 in. Face Seal (M)	1/2 in. Face Seal (M)	1.68	68.2	2.69	32.6	1.28	23.8	15/16		
CV11	1/8 in. NPT (M)	1/8 in. NPT (F)	0.1	44.3	1.74	25.4	1.0	15.88	5/8		
CV11	1/4 in. NPT (M)	1/4 in. NPT (F)	0.47	53.7	2.11	27.3	1.07	19.05	3/4		

Ordering Information

EX:SS-CV11 – NT 4 – 1/3 –

Body Materials	Connection Form	Dimension	Opening Pressure	Sealing Materila
SS: 316	TF: AM-LOK	1: 1/16 in.	1/3 psi	None: Fluorocarbon Rubber(FKM)-standard
	NT: NPT(M)	2: 1/8 in.	1 psi	BU: Nitrile Rubber
	FNT: NPT(F)	4: 1/4 in.	3 psi	EP: Ethylene Propylene Rubber(EPDM)
	MV: Face Seal(M)	6: 3/8 in.	5 psi	NE: Chloroprene Rubber(CR)
	GS: ISO Straight Thread (M)	8: 1/2 in.	10 psi	KZ: Perfluoroelastomer(FFKM)
	FGS: ISO Straight Thread (F)	12: 3/4 in.	25 psi	PT: PTFE
	RT: ISO Tapered Thread (M)	3M: 3 mm	50 psi	
	FRT: ISO Tapered Thread (M)	6M: 6 mm		
		8M: 8 mm		
		10M: 10 mm		
		12M: 12 mm		
		18M: 18 mm		

F10 Series Filters

SS-F10-TF4

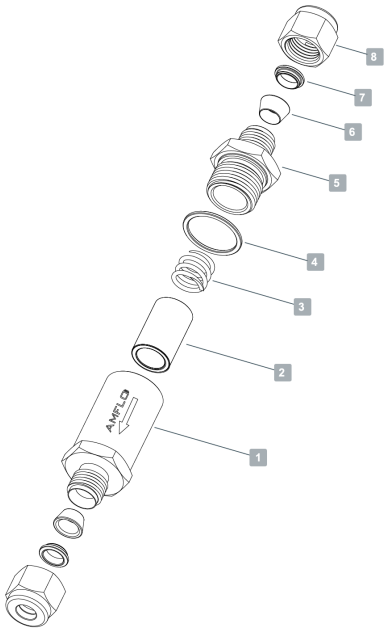

Features

- SS316
- Max Allowable Operating Pressure: 6000 psi(413 bar)
- AM-LOK end connection, NPT threads (F/M) and AFS face-seal
- The replaceable sintered filter element is available in nominal pore sizes of 0.1, 0.5, 2, 7, 15, 40, 60, and 90 micrometres

Pressure Temperature Rating

Connection Size		1/8in. 1/4 in. 3 mm 6 mm		3/8in. 1/4 in. 8-12 mm	
Material Temperature		SS316		316St.St.	
		Allowable Operation Pressure, psig/bar			
Min	Max	psig	bar	psig	bar
−20 (−28)	100 (37)	3000	207	2500	172
	200 (93)	2580	178	2150	148
	300 (148)	2330	161	1940	134
	400 (204)	2140	148	1780	123
	500 (260)	1990	137	1660	114
	600 (315)	1880	130	1560	108
	650 (343)	1845	127	1540	106
	700 (371)	1800	124	1500	103
	750 (398)	1760	121	1460	101
	800 (426)	1725	119	1440	99
	850 (454)	1690	117	1410	97
	900 (482)	1640	113	1360	94

Pressure Temperature Rating

	Connection Size	Sintered Filter in² (mm²)	Mesh Filter in² (mm²)
Inline Filter	1/8, 3 mm	0.55(350)	–
	1/4, 6 mm	1.3(830)	1.0(640)
	3/8, 1/2, 8-12 mm	2(1280)	1.7(1090)

Materials of Construction

No.	Component	QTY	Materials
1	Body	1	SS316
2	Poppet	1	SS316
3	Spring	1	SS316
4	Gasket O-ring	1	SS316(Silver Plated)
5	End connection	1	SS316
6	Front Ferrule	2	SS316
7	Back Ferrule	2	SS316
8	Nut	2	SS316

Dimensions

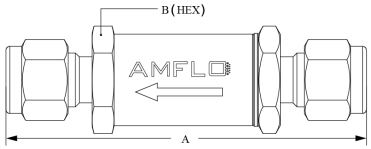

Dimensions

Port		Connection Size		A		B(HEX)	
mm	in.	Inlet	Outlet	mm	in.	mm	in.
2.39	0.094	1/8 in. AM-LOK	1/8 in. AM-LOK	57.5	2.26	14.4	9/16
4.75	0.187	1/4 in. AM-LOK	1/4 in. AM-LOK	74.7	2.94	19.05	3/4
7.14	0.281	3/8 in. AM-LOK	3/8 in. AM-LOK	81.4	3.20	25.4	1
10.30	0.406	1/2 in. AM-LOK	1/2 in. AM-LOK	88.5	3.48	25.4	1
2.39	0.094	3 mm AM-LOK	3 mm AM-LOK	57.5	2.26	14.4	9/16
4.75	0.187	6 mm AM-LOK	6 mm AM-LOK	74.9	2.95	19.05	3/4
6.40	0.252	8 mm AM-LOK	8 mm AM-LOK	80.1	3.15	25.4	1
7.90	0.311	10 mm AM-LOK	10 mm AM-LOK	81.9	3.22	25.4	1
2.39	0.094	1/8 in. NPT (F)	1/8 in. NPT (F)	55.0	2.17	14.4	9/16
4.75	0.187	1/4 in. NPT (F)	1/4 in. NPT (F)	73.0	2.87	19.05	3/4
10.30	0.406	1/2 in. NPT (F)	1/2 in. NPT (F)	85.5	3.36	26.69	11/6
4.75	0.187	1/4 in. NPT (M)	1/4 in. NPT (M)	68.2	2.69	19.05	3/4
9.50	0.374	3/8 in. NPT (M)	3/8 in. NPT (M)	71.1	2.8	25.4	1
4.75	0.187	1/4 in. Face Seal (M)	1/4 in. Face Seal (M)	71.5	2.81	19.05	3/4
10.3	0.406	1/2 in. Face Seal (M)	1/2 in. Face Seal (M)	78.4	3.08	25.4	1

Inline Filter Pressure Drop

Poppet Nominal Port Size µm	Inlet Pressure, psig(bar)						Pressure Drop, psig(bar)					
	5(0.34)		10(0.68)		15(1.0)		10(0.68)		50(3.4)		100(6.8)	
	Air Flow Rate						Water Flow Rate					
	std ft3/min	std L/min	std ft3/min	std L/min	std ft3/min	std L/min	US gal/min	L/min	US gal/min	L/min	US gal/min	L/min
Connection Size: 1/8in. 3mm							Connection Size: 1/8in. 3mm					
0.5	0.04	1.1	0.06	1.7	0.12	3.4	0.01	0.03	0.04	0.15	0.12	0.5
2	0.2	5.7	0.4	11.3	0.6	17.0	0.08	0.3	0.24	0.9	0.4	1.5
7	0.5	14.2	0.9	25.5	1.2	34.0	0.1	0.4	0.3	1.1	0.48	1.8
15	0.8	22.7	1.3	36.8	1.5	42.5	0.12	0.5	0.36	1.4	0.58	2.2
60	1.7	48.1	2.2	62.3	2.4	68.0	0.15	0.6	0.5	1.9	0.6	2.3
90	1.8	51.0	2.2	62.3	2.6	73.6	0.2	0.8	0.5	1.9	0.7	2.6
Connection Size: 1/4in. 6mm							Connection Size: 1/4in. 6mm					
0.5	0.12	3.4	0.26	7.4	0.48	13.6	0.04	0.2	0.17	0.64	0.29	1.1
2	0.6	17.0	1.4	39.6	2.3	65.1	0.24	0.9	0.68	3.25	1.3	4.9
7	1.2	34.0	2.9	82.1	4.7	133.1	0.4	1.5	1.3	4.92	2	7.6
15	1.4	39.6	2.9	82.1	4.7	133.1	0.5	1.9	1.3	4.92	2.1	7.9
40	2.2	62.3	4.7	133	7.3	206.5	0.75	2.8	2.6	9.84	4.1	15.5
60	3.1	87.8	5.9	167.1	8.5	240.7	0.9	3.4	3.3	12.49	4.6	17.4
90	4.1	116.1	7.5	212.4	10	283.2	1.2	4.5	4.2	15.89	6.1	23.1
140, 230, 440	4.7	133.1	8.8	249.2	12	339.8	1.7	6.4	5.6	21.19	7.8	29.5
Connection Size: 3/8in. 1/2in. 8-12mm							Connection Size: 3/8in. 1/2in. 8-12mm					
0.5	0.36	10.2	0.86	24.4	1.6	45.3	0.09	0.34	0.4	1.5	0.76	2.9
2	1.4	39.6	2.8	79.3	4	113.3	0.26	1.0	1.1	4.1	1.6	6.1
7	1.8	51.0	4.2	118.9	6.8	192.6	0.64	2.4	2.2	8.3	3.5	13.2
15	1.8	51.0	4.9	138.8	7.9	223.7	0.84	3.2	2.6	9.8	4.1	15.5
40	4.2	119	9.1	257.5	14	396	1.5	5.67	5.9	22.3	9.1	34.4
60	5.1	144.4	10	283.3	15	424.8	2	7.5	6.7	25	10	37.9
90	6.1	172.7	11	311.5	16	453.1	2.3	8.7	7.6	28	11	41.6
40, 140, 200	7.2	203.9	14	396.4	20	566.3	4.8	18	15	56	19	71.9

Ordering Information

EX:SS-F10	–	TF	4	–	0.5	–
Body Materials		Connection Form	Dimension	Filter grade (micorn)		Dispose
SS: 316		TF: AM-LOK	2: 1/8 in.	0.1	60	None: Standard Clean & Purge Treatment
		NT: NPT(M)	4: 1/4 in.	0.5	90	CO: Oxygen Clean
		FNT: NPT(F)	6: 3/8 in.	1	140	LF: Lubricant-Free
		MV: Face Seal(M)	8: 1/2 in.	2	230	
			3M: 3 mm	7	440	
			6M: 6 mm	15	LE	
			8M: 8 mm	40		
			10M: 10 mm			
			12M: 12 mm			

FT10 Series Filters

SS-FT10-TF4

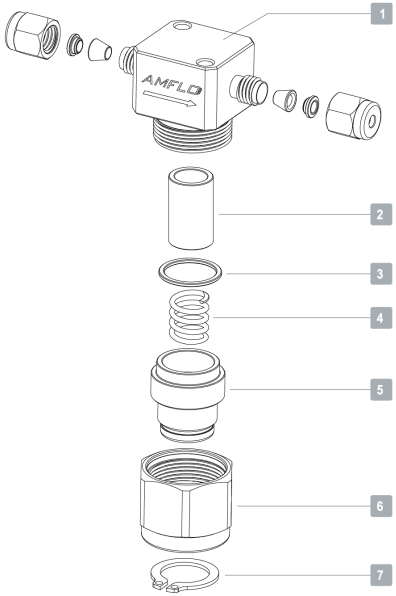

Features

- SS316 Body
- Operating Pressure: 3000 psi(206 bar)
- AM-LOK end connection, NPT threads (F/M) and AFS face-seal
- The replaceable sintered filter element is available in nominal pore sizes of 0.1, 0.5, 2, 7, 15, 40, 60, and 90 micrometres

Pressure Temperature Rating

Temperature Rating °F(°C)		SS316 Allowable Operation Pressure, psig/bar	
Min	Max	psig	bar
−20 (−28)	100 (37)	6000	414
	200 (93)	5160	356
	300 (148)	4660	321
	400 (204)	4280	295
	500 (260)	3980	274
	600 (315)	3760	259
	650 (343)	3700	255
	700 (371)	2600	248
	750 (398)	3520	243
	800 (426)	3460	239
	850 (454)	3380	233
	900 (482)	3280	223

Filtration Area

	Connection Size	Sintered Filter in² (mm²)	Mesh Filter in² (mm²)
Tee Filter	1/8, 1/4, 3 mm, 6mm	1.3(830)	1.0(640)
	3/8, 1/2, 8-12 mm	2(1280)	1.7(1090)

Materials of Construction

No.	Component	QTY	Materials
1	Body	1	SS316
2	Poppet	1	SS316(Sintered Plated)/Mesh
3	Gasket	1	SS316(Silver Plated)
4	Spring	1	SS302
5	Cap	1	SS316
6	Nut	1	SS316(Silver Plated)
7	Lock Nut	1	SS304

Dimensions

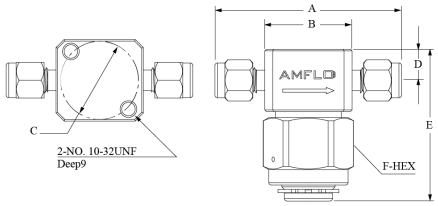

Dimensions

Port mm	Port in.	Connection Size Inlet	Connection Size Outlet	A mm	A in.	B mm	B in.	C mm	C in.	D mm	D in.	E mm	E in.	F mm	F in.
2.39	0.094	1/8 in. AM-LOK	1/8 in. AM-LOK	57.6	2.27	27.1	1.07	25.4	1.00	9.80	0.39	47.4	1.87	25.4	1.00
4.41	0.174	1/4 in. AM-LOK	1/4 in. AM-LOK	62.8	2.47	26.8	1.06	25.4	1.00	9.80	0.39	47.4	1.87	25.4	1.00
5.41	0.213	3/8 in. AM-LOK	3/8 in. AM-LOK	72.2	2.84	33.6	1.32	28.8	1.13	11.6	0.46	56.0	2.20	28.6	11/8
6.35	0.250	1/2 in. AM-LOK	1/2 in. AM-LOK	77.3	3.04	33.4	1.31	28.8	1.13	11.6	0.46	56.0	2.20	28.6	11/8
4.41	0.174	6 mm AM-LOK	6 mm AM-LOK	62.4	2.46	26.8	1.06	25.4	1.00	9.80	0.39	47.6	1.87	25.4	1.00
5.41	0.213	8 mm AM-LOK	8 mm AM-LOK	72.2	2.84	35.2	1.39	28.8	1.13	11.6	0.46	56.0	2.20	28.6	11/8
6.35	0.250	10 mm AM-LOK	10 mm AM-LOK	72.5	2.85	33.3	1.31	28.8	1.13	11.6	0.46	56.0	2.20	28.6	11/8
6.35	0.250	12 mm AM-LOK	12 mm AM-LOK	77.3	3.04	33.4	1.31	28.8	1.13	11.6	0.46	56.0	2.20	28.6	11/8
4.41	0.174	1/8 in. NPT (F)	1/8 in. NPT (F)	50.7	2.00	25.4	1.00	25.4	1.00	9.80	0.39	47.6	1.87	25.4	1.00
4.41	0.174	1/4 in. NPT (F)	1/4 in. NPT (F)	54.2	2.13	25.4	1.00	25.4	1.00	9.80	0.39	47.6	1.87	25.4	1.00
4.41	0.174	1/4 in. NPT (M)	1/4 in. NPT (M)	54.2	2.13	25.4	1.00	25.4	1.00	9.80	0.39	47.6	1.87	25.4	1.00
6.35	0.250	3/8 in. NPT (M)	3/8 in. NPT (M)	60.4	2.38	31.7	1.25	28.8	1.13	11.6	0.46	56.0	2.20	28.6	11/8
6.35	0.250	1/2 in. NPT (M)	1/2 in. NPT (M)	70.0	2.76	31.7	1.25	28.8	1.13	11.6	0.46	56.0	2.20	28.6	11/8
4.41	0.174	1/4 in. Face Seal (M)	1/4 in. Face Seal (M)	58.8	2.31	27.2	1.07	25.4	1.00	9.80	0.39	47.6	1.87	25.4	1.00

Inline Filter Pressure Drop

Poppet Nominal Port Size µm	Inlet Pressure, psig(bar) 5(0.34) Air Flow Rate std ft3/min	std L/min	10(0.68) std ft3/min	std L/min	15(1.0) std ft3/min	std L/min	Pressure Drop, psig(bar) 10(0.68) Water Flow Rate US gal/min	L/min	50(3.4) US gal/min	L/min	100(6.8) US gal/min	L/min
Connection Size: 1/8in. 3mm							Connection Size: 1/8in. 3mm					
0.5	0.04	1.1	0.06	1.7	0.12	3.4	0.004	0.15	0.17	0.6	0.29	1.1
2	0.2	5.7	0.4	11.3	0.6	17.0	0.008	0.3	0.24	0.9	0.4	1.5
7	0.5	14.2	0.9	25.5	1.2	34.0	0.1	0.4	0.3	1.1	0.48	1.8
15	0.8	22.7	1.3	36.8	1.5	42.5	0.12	0.5	0.36	1.4	0.58	2.2
40	1.6	45.3	2.0	56.6	2.2	62.3	0.14	0.53	0.4	1.5	0.6	2.3
60	1.7	48.1	2.2	62.3	2.4	68.0	0.15	0.6	0.5	1.9	0.6	2.3
90	1.8	51.0	2.2	62.3	2.6	73.6	0.2	0.8	0.5	1.9	0.6	2.3
140, 230, 440	1.8	51.0	2.3	65.1	2.6	73.6	0.2	0.8	0.5	1.9	0.7	2.6
Connection Size: 1/4in. 6mm							Connection Size: 1/4in. 6mm					
0.5	0.12	3.4	0.26	7.4	0.48	13.6	0.004	0.15	0.17	0.6	0.29	1.1
2	0.6	17.0	1.14	39.6	2.3	65.1	0.24	0.9	0.86	3.3	1.3	4.9
7	1.4	39.6	2.9	82.1	4.7	133.1	0.4	1.5	1.3	4.9	2	7.6
15	1.2	34.0	2.9	82.1	4.7	133.1	0.5	1.9	1.3	4.9	2.1	7.9
40	2.3	65.0	4.7	133	7.4	210	0.65	2.45	2.0	7.6	3.1	11.8
60	3.1	87.8	5.9	167.1	8.5	240.7	0.8	3.0	2.7	10.2	3.9	14.8
90	4.1	116.1	7.5	212.4	10	283.2	1.1	4.2	3.4	12.9	4.9	18.5
140, 230, 440	4.7	133.1	8.8	249.2	12	339.8	1.2	4.5	4.2	15.9	5.6	21.2
Connection Size: 3/8in. 1/2in. 8-12mm							Connection Size: 3/8in. 1/2in. 8-12mm					
0.5	0.36	10.2	0.86	24.4	1.6	45.3	0.09	0.3	0.4	1.5	0.76	2.9
2	1.4	39.6	2.8	79.3	4	113.3	0.26	1.0	1.1	4.2	1.6	6.1
7	1.8	51.0	4.2	118.9	6.8	192.6	0.64	2.4	2.2	8.3	3.5	13.2
15	1.8	51.0	4.9	138.8	7.9	223.7	0.84	3.2	2.6	9.8	4.1	15.5
40	4.2	119	9.1	257.5	14	396	1.3	4.9	4.2	15.9	5.9	22.3
60	5.1	144.4	10	283.2	15	424.8	1.5	5.7	4.8	18.2	6.7	25.4
90	6.1	172.7	11	311.5	16	453.1	1.7	6.4	5.5	20.8	7.6	28.8
140, 230, 440	7.2	203.9	14	396.4	20	566.3	2.4	9.1	7.2	27.3	10	37.9

Ordering Information

EX:SS-FT10 – TF 4 – 0.5 –

Body Materials	Connection Form	Dimension	Filter grade (micorn)		Dispose
SS: 316	TF: AM-LOK	2: 1/8 in.	0.1	60	None: Standard Clean & Purge Treatment
	NT: NPT(M)	4: 1/4 in.	0.5	90	CO: Oxygen Clean
	FNT: NPT(F)	6: 3/8 in.	1	140	LF: Lubricant-Free
	MV: Face Seal(M)	8: 1/2 in.	2	230	
		3M: 3 mm	7	440	
		6M: 6 mm	15	LE	
		8M: 8 mm	40		
		10M: 10 mm			
		12M: 12 mm			