ACRYLIC PLASTIC FLOW METER FAC300

Technical Data

Service: Water, Liquid or Air
Wetted parts material: Body-Acrylic, Plastic (POLYPROPYLENE), O-ring- EPDM
Float Guide: 316 stainless steel
Connection material: POLYPROPYLENE
Temperature & pressure limits: 120 psig (8.4 bar) @100°F (38°C)
Temperature limited: 0-45°C
Accuracy: ±3% full scale
Mounting: vertical position
Weight: 0.7 kg

Approvals:

EAC

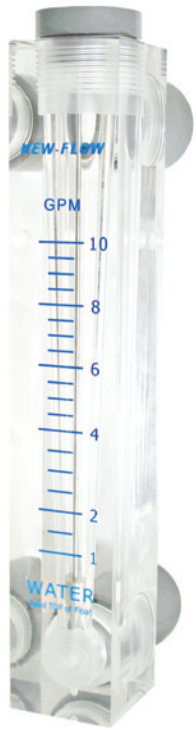

FAC301

Range Table

A. Fluid Type: Water

Code	Flow Range	Flow Unit
11	0.5~5	GPM, Gallon (us) per Minute
12	0.7~7	GPM, Gallon (us) per Minute
13	1~10	GPM, Gallon (us) per Minute
14	2~20	GPM, Gallon (us) per Minute
15	2~20	LPM, Litter per Minute
16	2.5~25	LPM, Litter per Minute
17	5~50	LPM, Litter per Minute
18	10~90	LPM, Litter per Minute
19	0.1~1	M³/H, Cubic Meter per Hour
20	0.3~3	M³/H, Cubic Meter per Hour
21	0.5~5	M³/H, Cubic Meter per Hour

B. Fluid Type: Air

Code	Flow Range	Flow Unit
23	2.5~25	SCFM, Standard Cubic Feet per Minute
24	3~30	SCFM, Standard Cubic Feet per Minute
25	5~50	SCFM, Standard Cubic Feet per Minute
26	10~100	SCFM, Standard Cubic Feet per Minute
27	80~800	NLPM, Normal Litter per Minute
28	160~1600	NLPM, Normal Litter per Minute
29	300~3000	NLPM, Normal Litter per Minute
30	4~40	NM³/H, Normal Cubic Meter per Hour
31	5~50	NM³/H, Normal Cubic Meter per Hour
32	10~100	NM³/H, Normal Cubic Meter per Hour
33	20~200	NM³/H, Normal Cubic Meter per Hour

FAC302

Dimensions

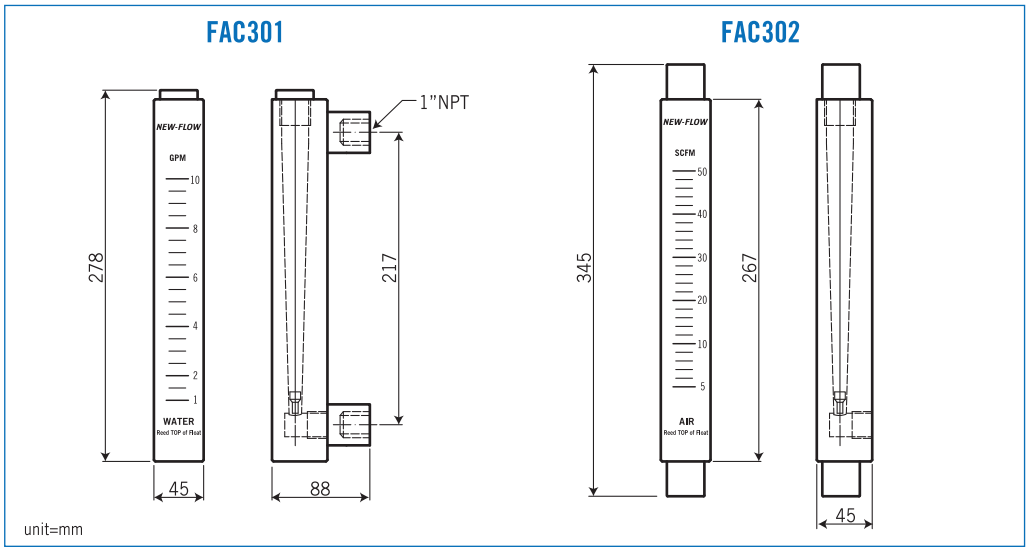

Ordering Information

Model	FAC301	FAC302

Code	Float Material
1	SS316

Code	Connection Size
A	1"NPT Female

Code	Range Scale
	Please refer to the Range Table.

Complete ordering code