External Dial Caliper Gauges

- These Gauges are designed for use in measuring external dimension of large measuring work piece and special form workpiece such as castings, forgings and sheet metal work which are difficult to measure . Please select according to shape and measuring depth. The convenient retraction lever allows for one-hand operation and good gauge control.

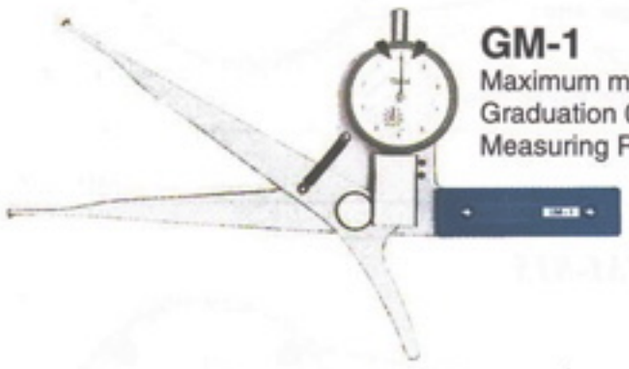

GM-1
Maximum measuring depth 125mm
Graduation 0.1mm
Measuring Range 0~90mm

GM-2
Maximum measuring depth 250mm
Graduation 0.1mm
Measuring Range 0~90mm

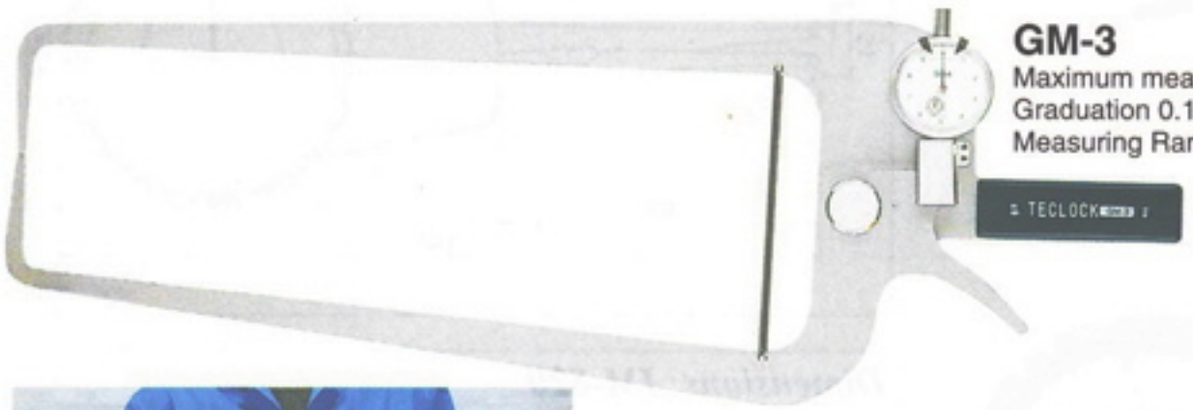

GM-3
Maximum measuring depth 400mm
Graduation 0.1mm
Measuring Range 0~90mm

Overall length of GM-3 is large as 635mm.

GM-9
Maximum measuring depth 100mm
Graduation 0.1mm
Measuring Range 0~30mm

Dimensions

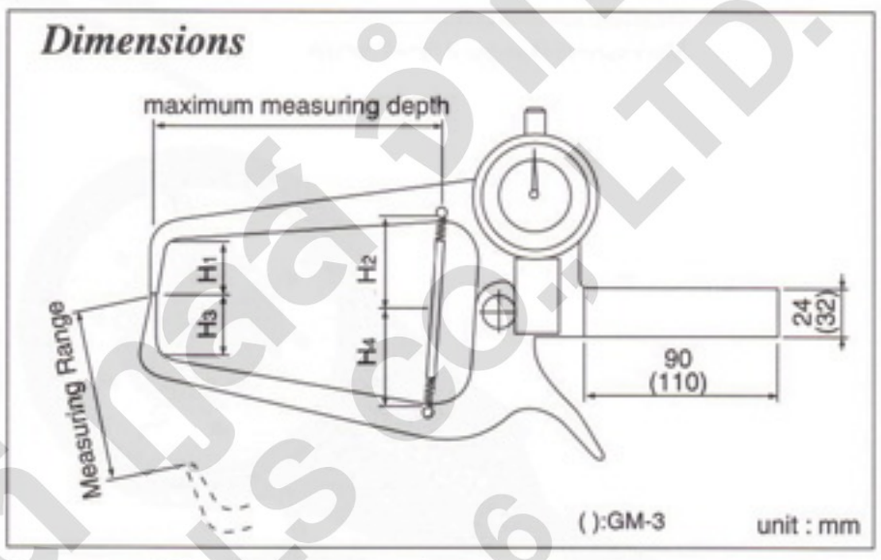

Dimension Table

Model	H_1	H_2	H_3	H_4
GM-1	25	40	25	40
GM-2	50	60	50	60
GM-3	60	70	60	80
GM-9	2	12	2	12
GM-11	2	6	2	6
GM-20	17	11	17	11
GM-21	65	70	10	15
GM-22	20	25	65	70

unit : mm

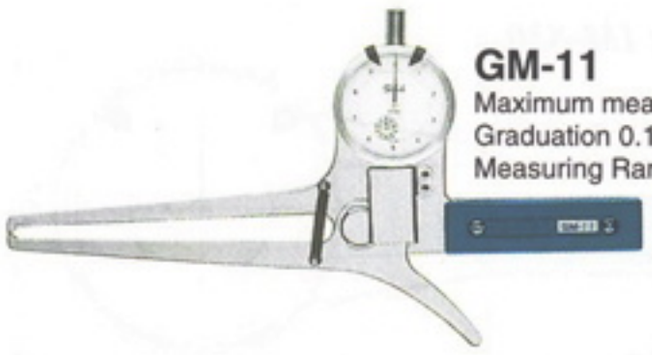

GM-11
Maximum measuring depth 125mm
Graduation 0.1mm
Measuring Range 0~50mm

GM-20
Maximum measuring depth 125mm
Graduation 0.1mm
Measuring Range 0~80mm

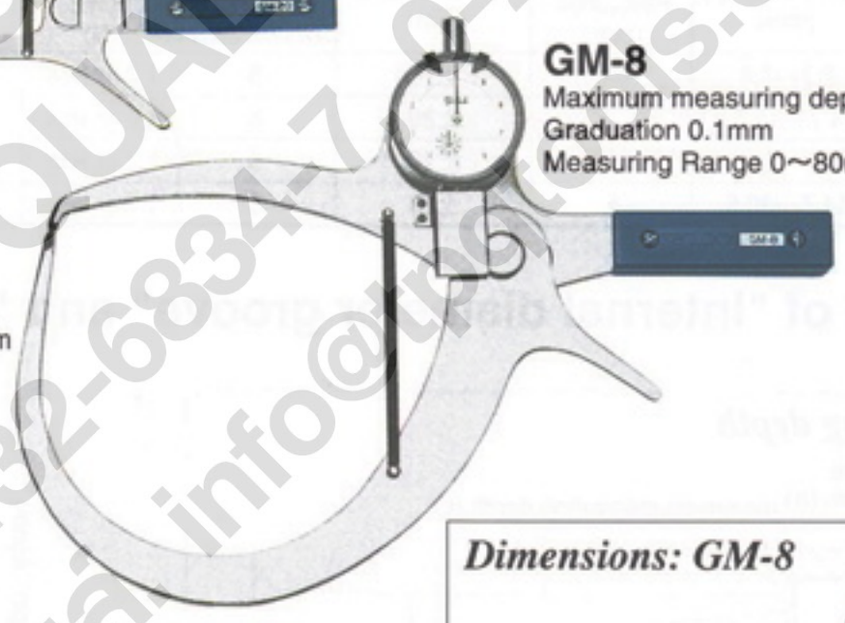

GM-8
Maximum measuring depth 130mm
Graduation 0.1mm
Measuring Range 0~80mm

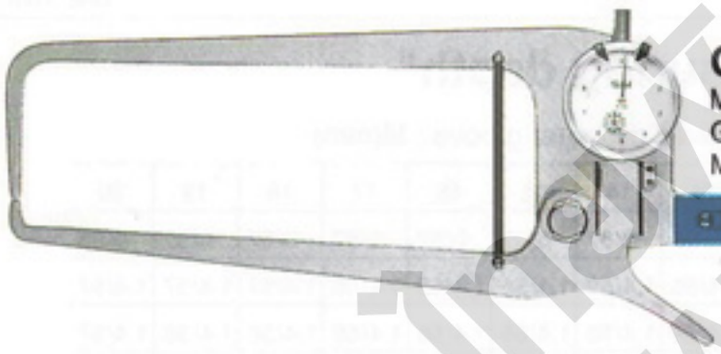

GM-21
Maximum measuring depth 220mm
Graduation 0.1mm
Measuring Range 0~90mm

GM-22
Maximum measuring depth 250mm
Graduation 0.1mm
Measuring Range 0~90mm

Dimensions: GM-8

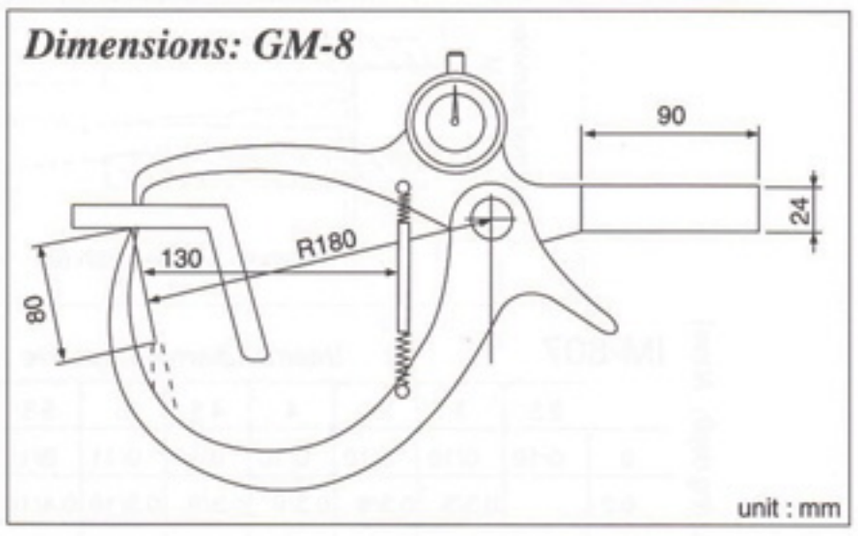

Specifications

Model	Graduation (mm)	Measuring Range (mm)	Indication Error (mm)	maximum measuring depth (mm)	Measuring Force (N)	Weight (g)
GM-1	0.1	0~90	±0.1	125	5 or less	530
GM-2	0.1	0~90	±0.2	250	5 or less	800
GM-3	0.1	0~90	±0.2	400	10 or less	1,400
GM-8	0.1	0~80	±0.1	130	5 or less	550
GM-9	0.1	0~30	±0.1	100	5 or less	460
GM-11	0.1	0~50	±0.1	125	5 or less	480
GM-20	0.1	0~80	±0.1	125	5 or less	500
GM-21	0.1	0~90	±0.1	220	5 or less	660
GM-22	0.1	0~90	±0.2	250	5 or less	720

บริษัท ไทยพัฒนสิน คุณภาพ จำกัด
THAIPHATANASIN QUALITY TOOLS CO.,LTD.
Tel. 0-2432-6834-7 Fax. 0-2432-6835-6
info@tpqtools.com

- Measuring internal diameter of workpiece by arm lever operation.
- Suitable for measuring groove of narrow place of workpiece.
- Hard metal of arm edges minimizes the wear.
- Easy direct reading with coaxial short hand.

IM-807
Graduation 0.005mm
Measuring Range 2.5~7.5mm

IM-815
Graduation 0.01mm
Measuring Range 5~15mm

IM-820
Graduation 0.01mm
Measuring Range 10~20mm

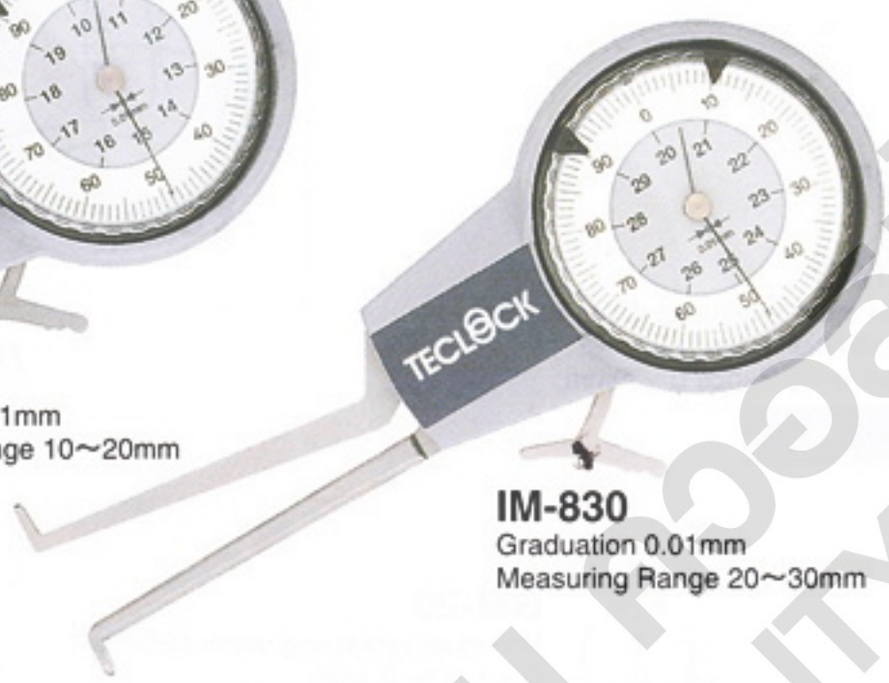

IM-830
Graduation 0.01mm
Measuring Range 20~30mm

Dimensions: IM-807

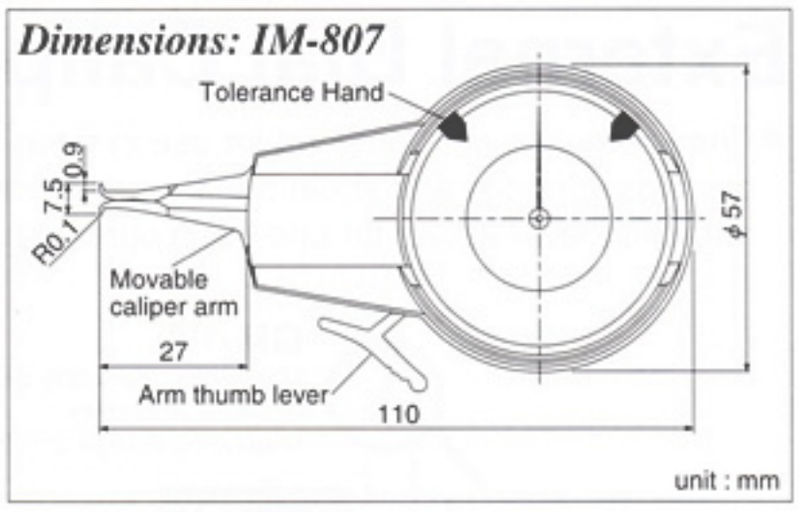

Dimensions: IM-815

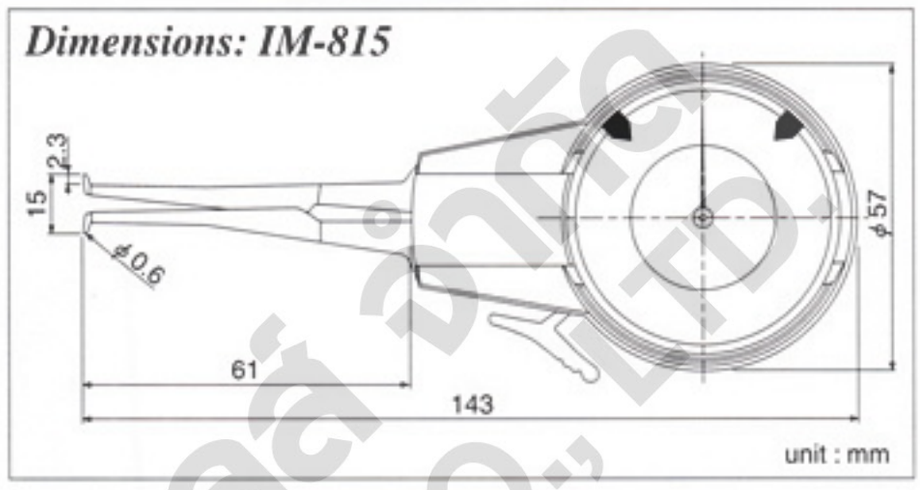

Dimensions: IM-820

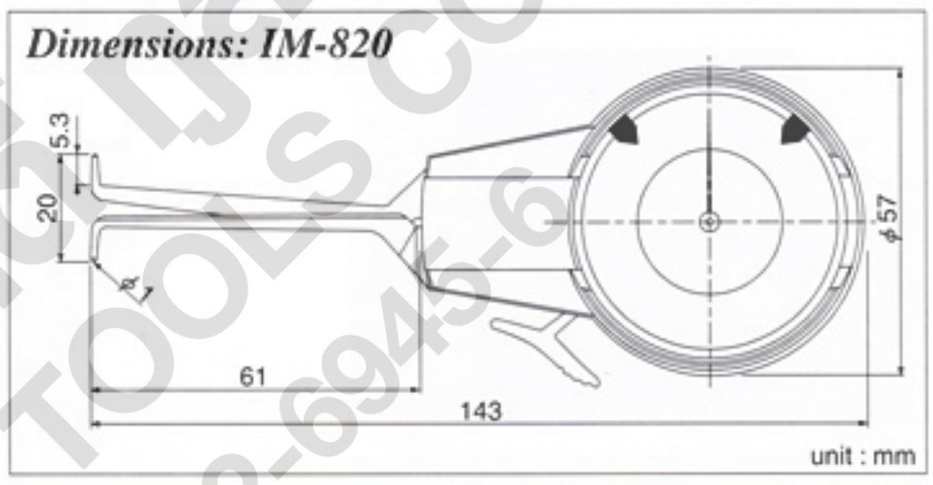

Dimensions: IM-830

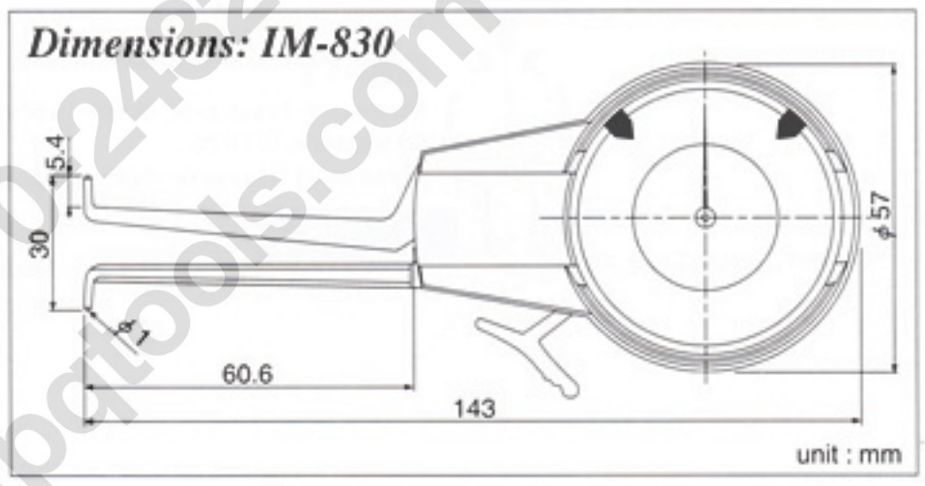

Specifications

Model	Graduation (mm)	Measuring Range (mm)	Movable Range (mm)	Pointer Revolution (mm)	Indication Error (μm)	Repeatability (μm)	Measuring Force (N)	Weight (g)
IM-807	0.005	2.5~7.5	2.3~7.8	0.5	±15	5	1.7 or less	120
IM-815	0.01	5~15	4.7~15.5	1	±20	5	1.7 or less	140
IM-820	0.01	10~20	9.5~20.5	1	±20	5	1.7 or less	140
IM-830	0.01	20~30	14.7~30.5	1	±20	5	1.7 or less	140

Relationship Table of "Internal diameter groove" and "Maximum measuring depth"

Measuring depth

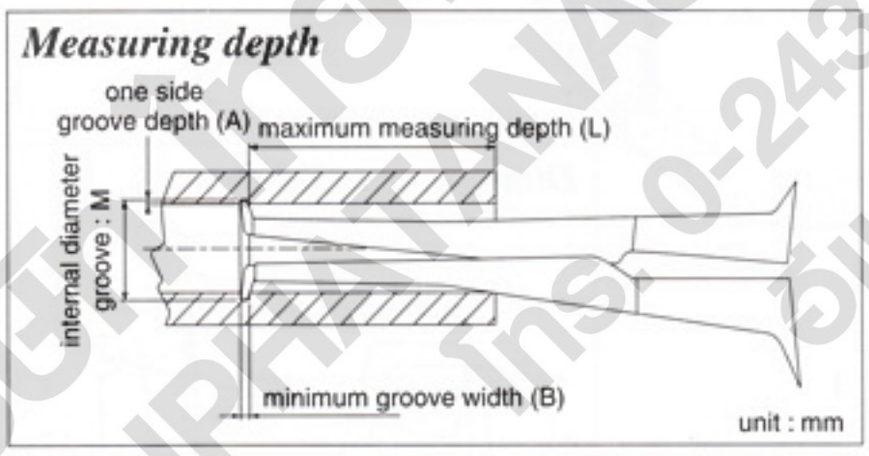

IM-807 — Internal diameter groove : M(mm)

One side measuring depth : A(mm)	2.5	3	3.5	4	4.5	5	5.5	6	6.5	7	7.5
0	0/10	0/10	0/10	0/10	0/10	0/11	0/11	0/11	0/11	0/12	0/12
0.2		0.3/9	0.3/9	0.3/9	0.3/9	0.3/10	0.4/10	0.4/10	0.4/10	0.4/10	0.4/10
0.4			0.4/8	0.4/8	0.4/8	0.4/9	0.4/9	0.4/9	0.4/9	0.4/10	0.4/10
0.6				0.5/7	0.5/7	0.5/7	0.5/8	0.5/8	0.5/8	0.5/8	0.5/9
0.7	B/L			0.6/5	0.6/5	0.6/6	0.6/6	0.6/6	0.6/6	0.6/7	0.6/7

IM-815 — Internal diameter groove : M(mm)

One side measuring depth : A(mm)	5	6	7	8	9	10	11	12	13	14	15
0	0/29	0/31	0/31	0/32	0/32	0/33	0/34	0/35	0/36	0/37	0/39
0.5		0.6/9	0.6/29	0.6/29	0.6/29	0.6/29	0.6/30	0.6/31	0.6/32	0.6/34	0.6/35
1			0.9/25	0.9/25	0.9/26	0.9/26	0.9/27	0.9/28	0.9/29	0.9/30	0.9/31
1.5				1.1/22	1.1/23	1.1/23	1.1/24	1.1/25	1.1/26	1.1/27	1.1/28
2					1.3/12	1.3/13	1.3/15	1.3/19	1.3/22	1.3/23	1.3/24
2.3	B/L					1.6/4	1.6/4	1.6/5	1.7/7	1.8/11	1.7/22

IM-820 — Internal diameter groove : M(mm)

One side measuring depth : A(mm)	10	11	12	13	14	15	16	17	18	19	20
0	0/55	0/56	0/56	0/56	0/57	0/57	0/57	0/57	0/57	0/57	0/58
0.5		1.4/55	1.4/56	1.4/56	1.4/56	1.4/56	1.4/56	1.4/56	1.4/57	1.4/57	1.4/57
1			1.4/56	1.4/56	1.4/56	1.4/56	1.4/56	1.4/56	1.4/56	1.4/56	1.4/57
1.5				1.4/55	1.4/55	1.4/55	1.4/55	1.4/56	1.4/56	1.4/56	1.4/56
2					1.4/55	1.4/55	1.4/55	1.5/55	1.5/55	1.5/56	1.5/56
2.5						1.4/55	1.5/55	1.5/55	1.6/55	1.6/55	1.6/55
3							1.5/54	1.6/54	1.6/55	1.6/55	1.6/55
3.5								1.6/54	1.6/54	1.6/54	1.7/55
4									1.7/54	1.7/54	1.7/54
4.5	B/L									1.7/53	1.8/54

IM-830 — Internal diameter groove : M(mm)

One side measuring depth : A(mm)	20	21	22	23	24	25	26	27	28	29	30
0	0/58	0/58	0/58	0/59	0/59	0/59	0/60	0/61	0/61	0/61	0/61
0.5		1.3/58	1.4/58	1.4/59	1.4/59	1.4/59	1.4/60	1.4/60	1.4/61	1.5/61	1.5/61
1			1.4/58	1.4/58	1.4/59	1.4/59	1.4/59	1.4/60	1.4/60	1.5/61	1.5/61
1.5				1.5/58	1.5/58	1.5/59	1.5/59	1.5/59	1.5/60	1.6/60	1.6/61
2					1.5/58	1.5/59	1.5/59	1.5/59	1.5/60	1.6/60	1.6/61
2.5						1.6/58	1.6/59	1.6/59	1.6/59	1.7/60	1.7/60
3							1.6/58	1.6/59	1.6/59	1.7/60	1.8/60
3.5								1.6/58	1.7/59	1.9/59	1.8/60
4									1.8/59	1.9/59	1.9/59
4.5	B/L									2.0/53	20/59

B=Minimum groove width L=Maximum measuring depth

USUT เครื่องมือวัดคุณภาพ THAI NAKARIN QUALITY TOOLS CO., LTD. Tel. 0-2432-6945-6 Fax. 0-2432-6834-7, 0-2432-6945-6 อีเมล์ info@tpqtools.com

- Internal caliper gauge to measure internal diameter of cylindrical workpiece and recessed groove diameter. It can measure groove diameter of "O" ring by modifying spare contact point.
- Set dimension within ±1mm (indication range 2mm) can be comparatively measured (880 series) by alternatively using auxiliary spare contact point in accordance with measured dimension.

- Please set standard dimension within measuring range with micrometer or ring gauge.

IM-880

Maximum Measuring Depth 70mm
Graduation 0.01mm
Measuring Range 20~35mm

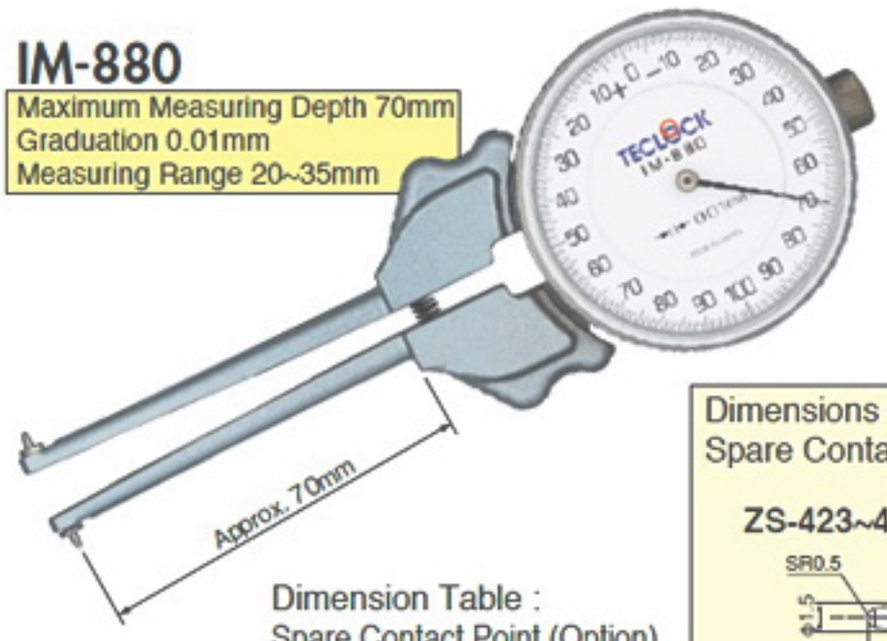

Dimension Table :
Spare Contact Point (Option)

Code No.	L1	L2	Measuring Range
ZS-423	2.5	4	20~23
ZS-424	3.5	5	22~25
ZS-425	4.5	6	24~27
ZS-426	5.5	7	26~29
ZS-427	5.5	8	28~31
ZS-428	5.5	9	30~33
ZS-429	5.5	10	32~35

unit : mm

Dimensions :
Spare Contact Point (Option)

ZS-423~427

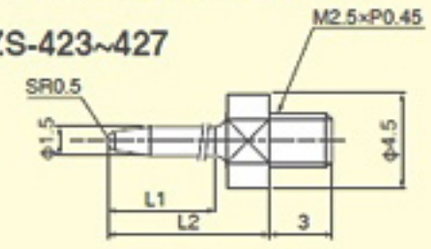

ZS-428,429

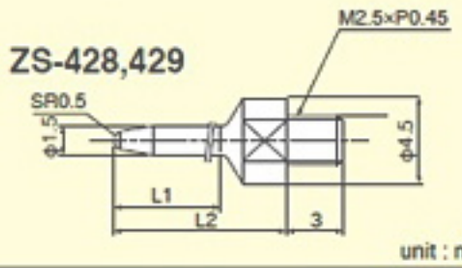

unit : mm

IM-881

Maximum Measuring Depth 75mm
Graduation 0.01mm
Measuring Range 30~62mm

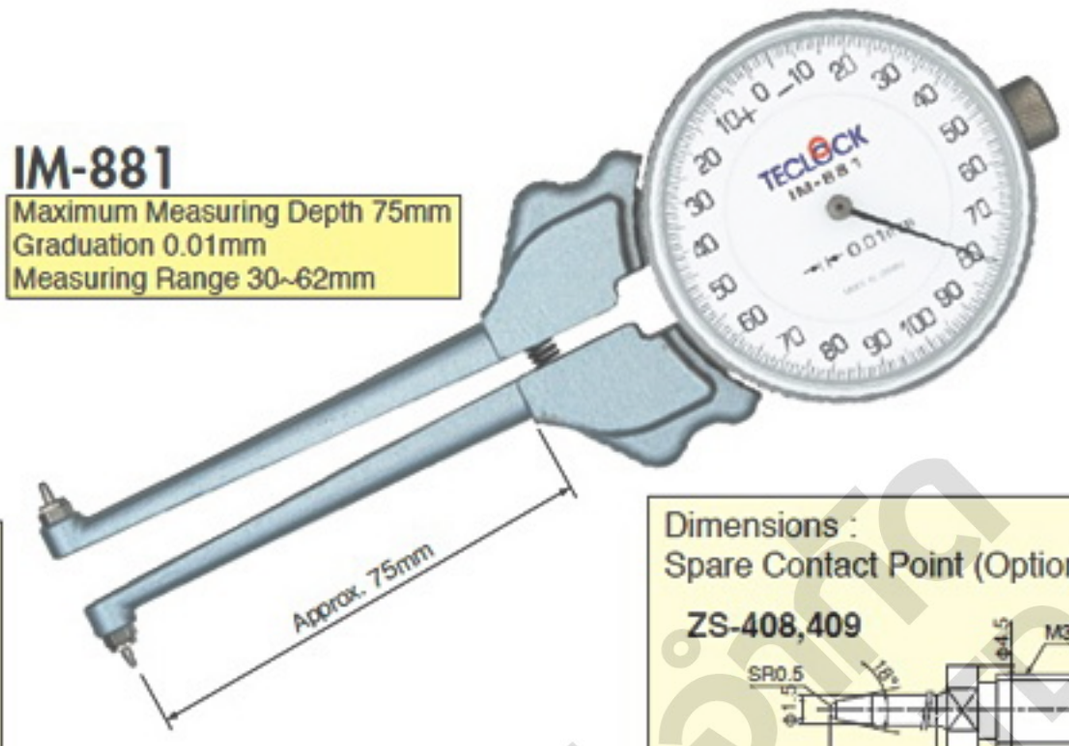

Dimension Table :
Spare Contact Point (Option)

Code No.	L1	L2	Measuring Range
ZS-408	3	4.5	30~38
ZS-409	5.5	7.5	36~44
ZS-410	6	10.5	42~50
ZS-411	6	13.5	48~56
ZS-412	6	16.5	54~62

unit : mm

Dimensions :
Spare Contact Point (Option)

ZS-408,409

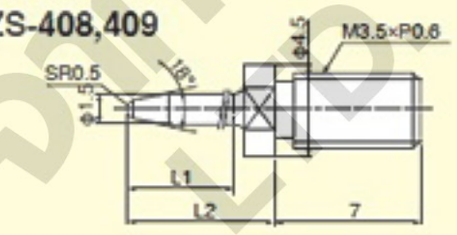

ZS-410~412

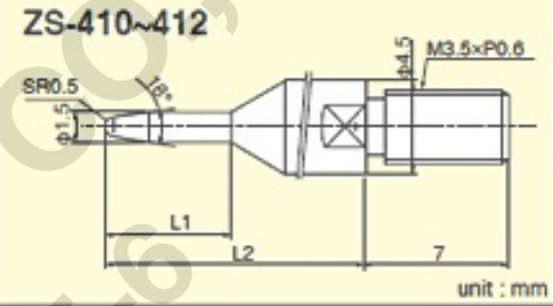

unit : mm

IM-882

Maximum Measuring Depth 90mm
Graduation 0.01mm
Measuring Range 55~153mm

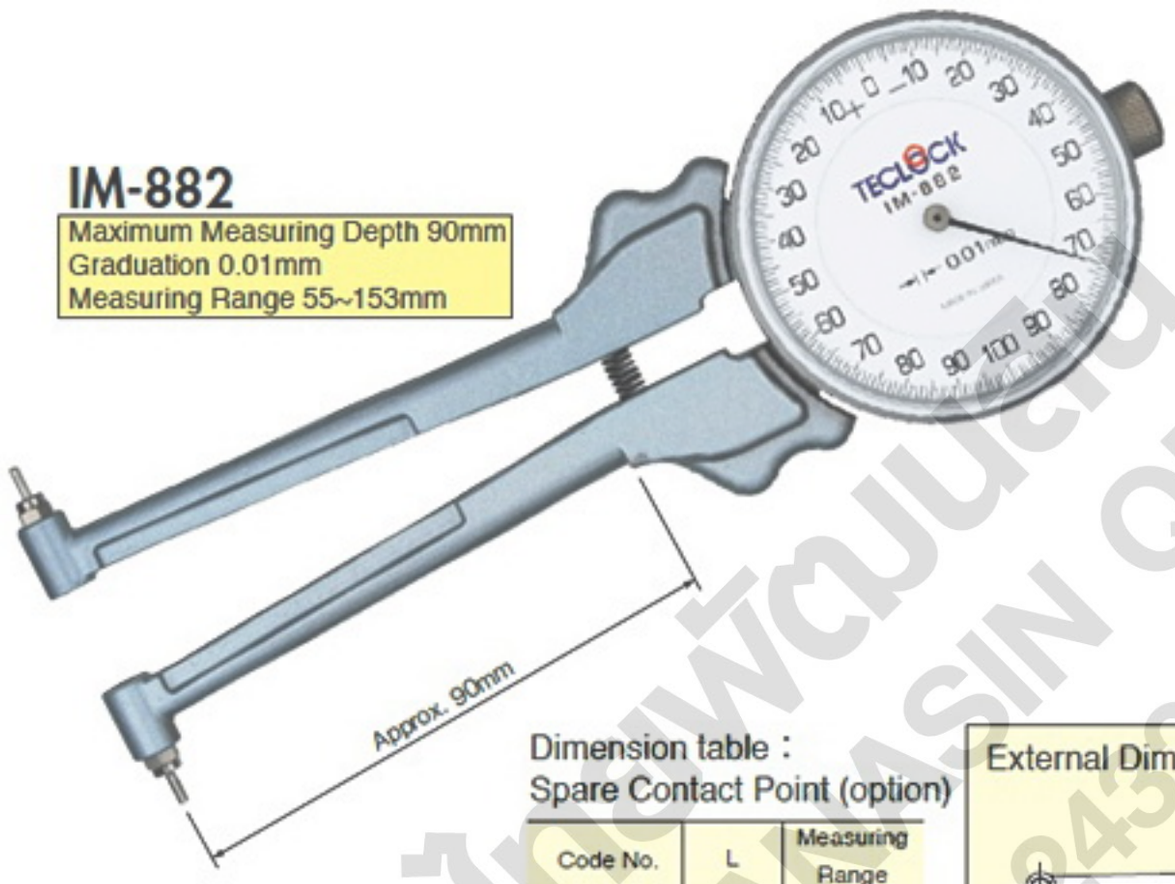

Dimension table :
Spare Contact Point (option)

Code No.	L	Measuring Range
ZS-413	7	55~73
ZS-414	15	71~89
ZS-415	23	87~105
ZS-416	31	103~121
ZS-417	39	119~137
ZS-418	47	135~153

unit : mm

Dimensions : Spare Contact Point (Option)

ZS-413

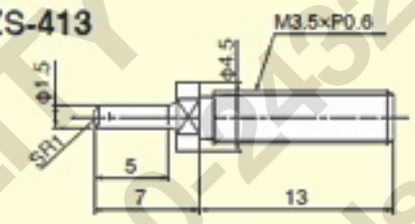

ZS-414

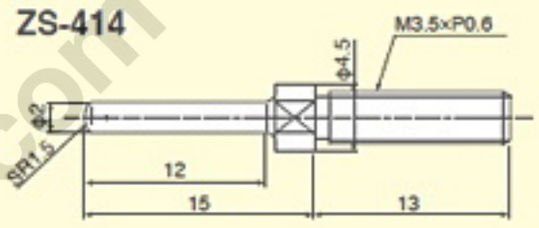

ZS-415~418

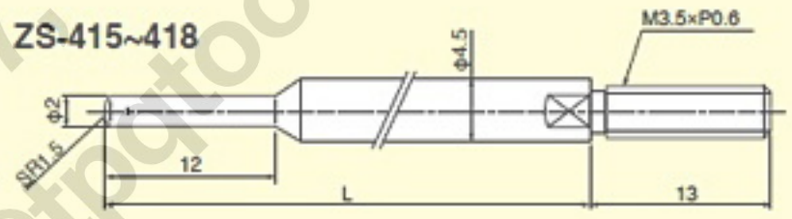

unit : mm

External Dimensions

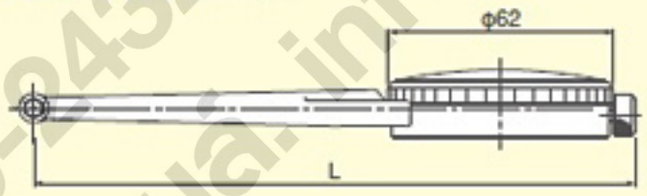

Model	L
IM-880	165
IM-881	170
IM-882	183

unit : mm

Dimensions

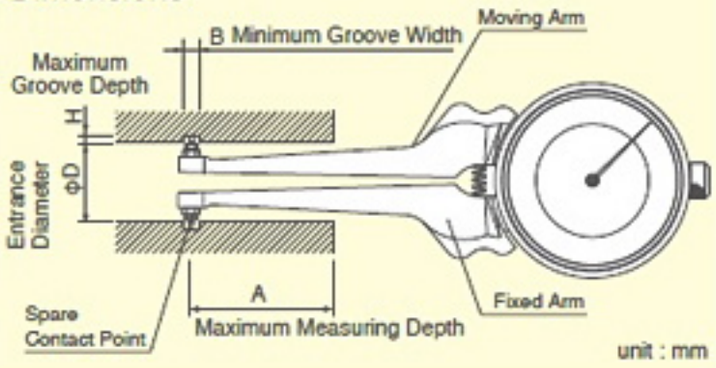

unit : mm

Specifications

Model	Graduation (mm)	Measuring Range (mm)	Indicating Range (mm)	Indication Error (μm)	Measuring Force (N)	Weight (g)	Spare Contact Point		Maximum Measuring Depth A (mm)	Entrance Diameter Φd (mm)*	Groove Depth H (mm)	Minimum Groove Width B (mm)
							Code No.	Measuring Range (mm)				
IM-880	0.01	20~35	2	±20	3 or less	196	ZS-423	20~23	70	15~18	2.5	2.5
							ZS-424	22~25		15~18	3.5	
							ZS-425	24~27		16~19	4	
							ZS-426	26~29		18~21	4	
							ZS-427	28~31		20~23	4	
							ZS-428	30~33		22~25	4	
							ZS-429	32~35		24~27	4	
IM-881	0.01	30~62	2	±20	3 or less	218	ZS-408	30~38	75	24~32	3	2.5
							ZS-409	36~44		27.4~35.4	4.3	
							ZS-410	42~50		33.4~41.4	4.3	
							ZS-411	48~56		39.4~47.4	4.3	
							ZS-412	54~62		45.4~53.4	4.3	
IM-882	0.01	55~153	2	±20	3 or less	240	ZS-413	55~73	90	45~63	5	3.5
							ZS-414	71~89		54~72	8.5	
							ZS-415	87~105		70~88	8.5	
							ZS-416	103~121		86~104	8.5	
							ZS-417	119~137		102~120	8.5	
							ZS-418	135~153		118~136	8.5	

*ΦD=Measuring Rang – 2H

บริษัท ไทยพัฒนาเครื่องมือ จำกัด
THAI QUALITY TOOLS CO., LTD.
Tel. 0-2432-6834-7, 0-2432-6945-6
info@tpqtools.com

• These gauges are designed for use in measuring deep internal diameter of bores of castings etc, and for internal reading in fabrications. Clearance has been provided for use in recessed bores. The convenient retraction lever allows one-hand operation.

IM-1
Maximum measuring depth 130mm
Graduation 0.1mm
Measuring Range 10~100mm

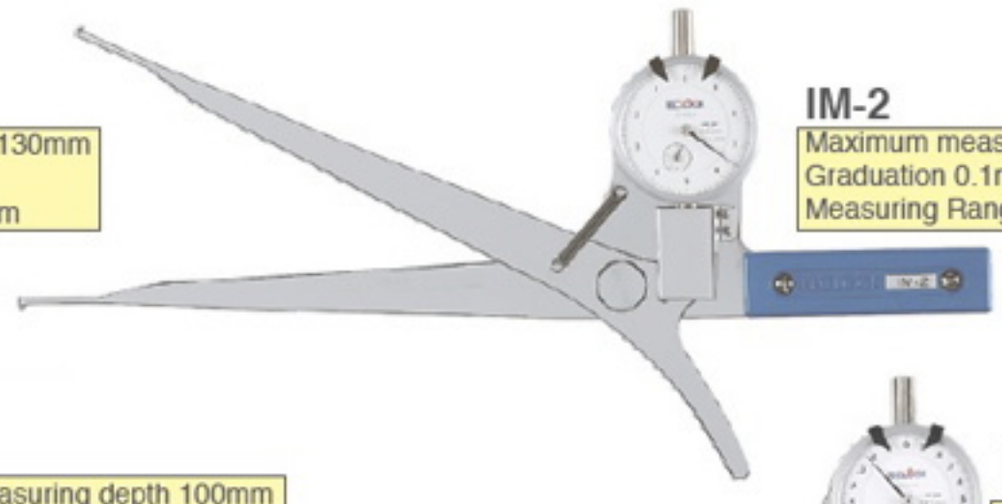

IM-2
Maximum measuring depth 180mm
Graduation 0.1mm
Measuring Range 10~100mm

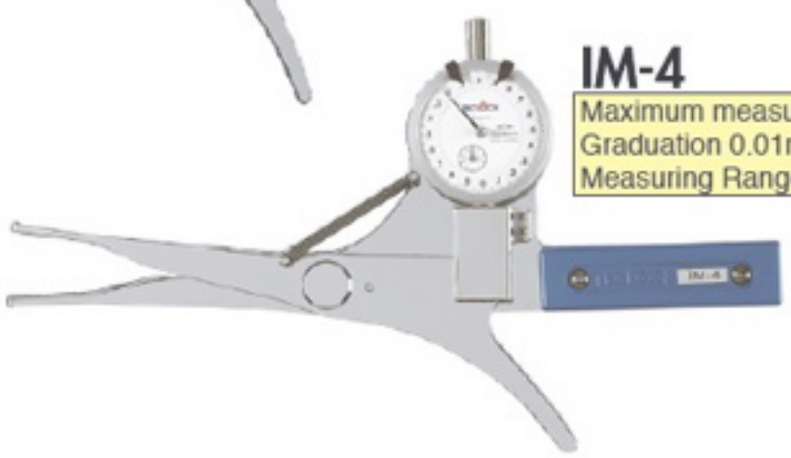

IM-4
Maximum measuring depth 100mm
Graduation 0.01mm
Measuring Range 10~30mm

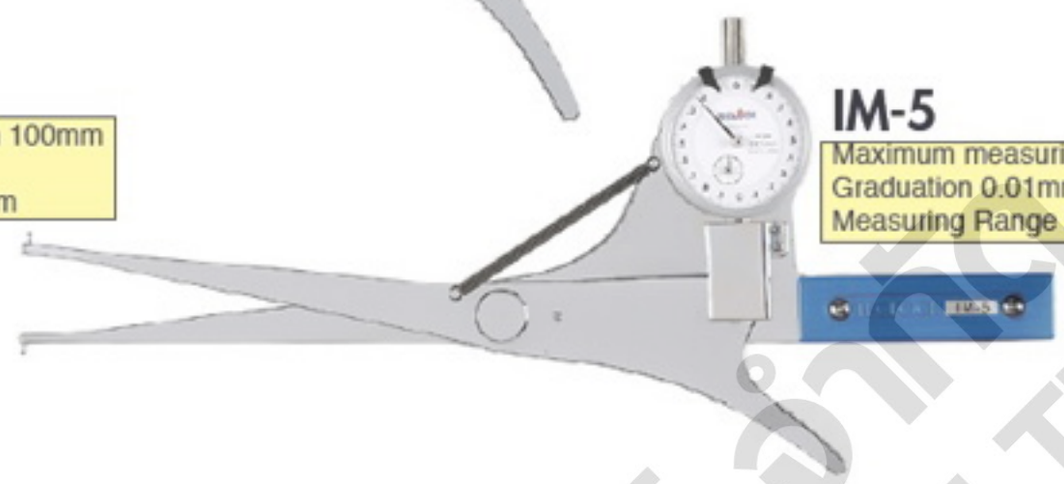

IM-5
Maximum measuring depth 150mm
Graduation 0.01mm
Measuring Range 20~40mm

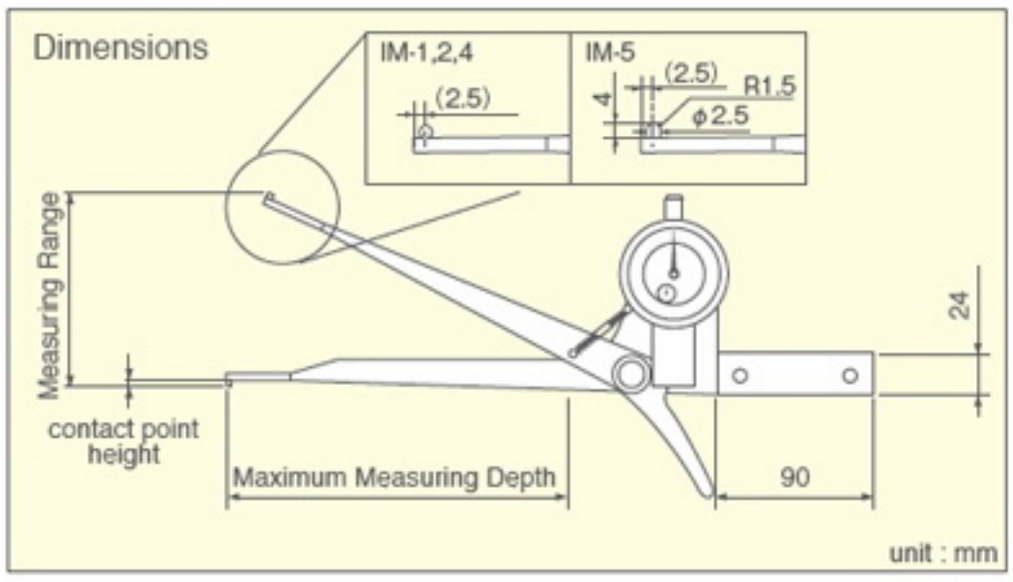

Specifications

Model	Graduation (mm)	Measuring Range (mm)	Indication Error (mm)	Maximum Measuring Depth (mm)	Contact Point Height (mm)	Measuring Force (N)	Weight (g)
IM-1	0.1	10~100	±0.1	130	2	5 or less	500
IM-2	0.1	10~100	±0.1	180	2	5 or less	620
IM-4	0.01	10~30	±0.02	100	2	5 or less	500
IM-5	0.01	20~40	±0.02	150	4	5 or less	600

Internal size of workpiece is 10mm, 15mm, 20mm and 30mm or over against measuring applicable depth.

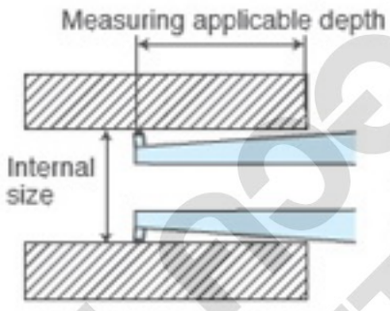

Model \ Internal Size	10	15	20	30~
IM-1	35	50	80	130
IM-2	35	50	80	180
IM-4	35	50	80	100
IM-5	–	–	140	150

unit : mm

Inside of workpiece should be straight or round shape without step etc.

• Suitable for measuring thickness and diameter of metal, lens, rubber, plastic, paper, felt, hair, pearl etc. in actual dimension.
• Ceramic contact point and anvil feature are superior for anti-abrasion and rust. In addition, there are steel FE type and AT type which rarely adheres with adhesion tape.
• As to shape of contact point and anvil, there are standard type and other various kinds.
• Measuring force of standard type is not more than 2.5N as final pressure, low measuring force type of which final pressure is about 0.4N (about 40gf) is also available.

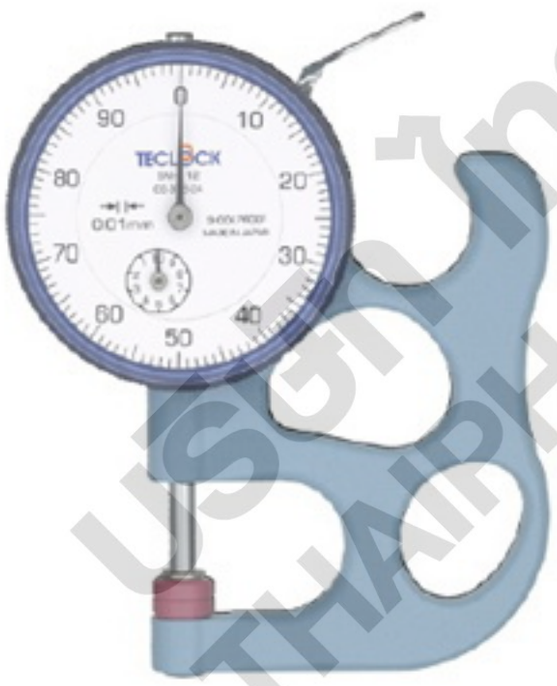

SM-112
Standard type
Graduation 0.01mm
Measuring Range 10mm

SM-112P
(Direct Reading Graduation)

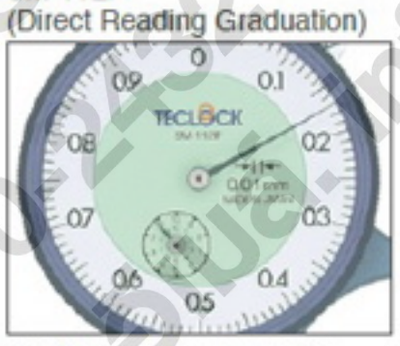

1.17mm reading example

SM-112D
(Coaxial Revolution Pointer)

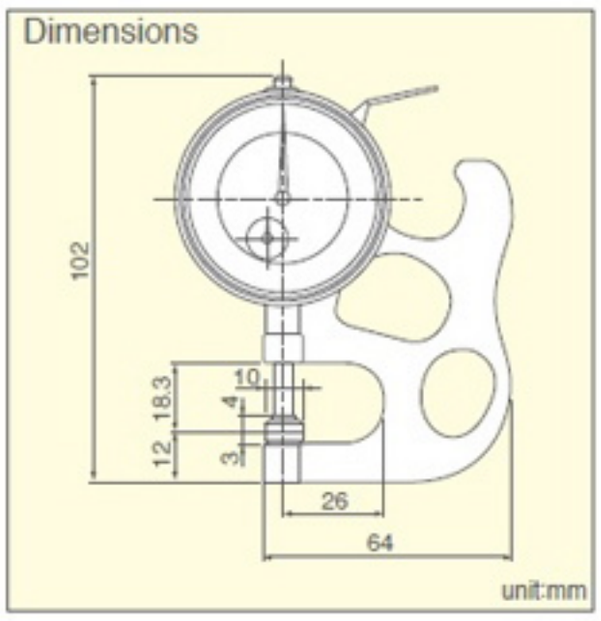

Specifications SM-112 Series

Model	Graduation (mm)	Measuring Range (mm)	Accuracy (μm)	Parallelism (μm)	Dial Reading	Measuring Force (N)	Contact Point Form (mm)	Anvil Form (mm)	Weight (g)
SM-112	0.01	10	±15	5	0-50-100	2.5 or less	φ 10 Flat	φ 10 Flat	145
SM-112LS	0.01	10	±15	—	0-50-100	2.5 or less	φ 3.2 Ball	φ 10 Flat	145
SM-112LW	0.01	10	±15	—	0-50-100	2.5 or less	φ 3.2 Ball	φ 3.2 Ball	145
SM-112-3A	0.01	10	±15	5	0-50-100	2.5 or less	φ 5 Flat	φ 5 Flat	145
SM-112-80g	0.01	10	±15	5	0-50-100	Stop Point Measuring Forced 0.8±0.05	φ 10 Flat	φ 10 Flat	145
SM-112P	0.01	10	±15	5	0-0.5-1	2.5 or less	φ 10 Flat	φ 10 Flat	145
SM-112FE	0.01	10	±15	5	0-50-100	2.5 or less	φ 10 Flat	φ 10 Flat	145
SM-112AT	0.01	10	±15	8	0-50-100	0.8 or less	φ 10 Flat	φ 10 Flat	145
SM-112D	0.01	10	±15	5	0-50-100	2.5 or less	φ 10 Flat	φ 10 Flat	145

LS, LW, 3A For more information about the see (P**)

บริษัท ไทยพัฒนาเครื่องมือวัด จำกัด
THAIPHATANASIN QUALITY TOOLS CO., LTD.
Tns. 02-432-6845-6
Sales.info@toolstools.com

SM-528

Measurement of up to 20mm thick

Graduation 0.01mm
Measuring Range 20mm

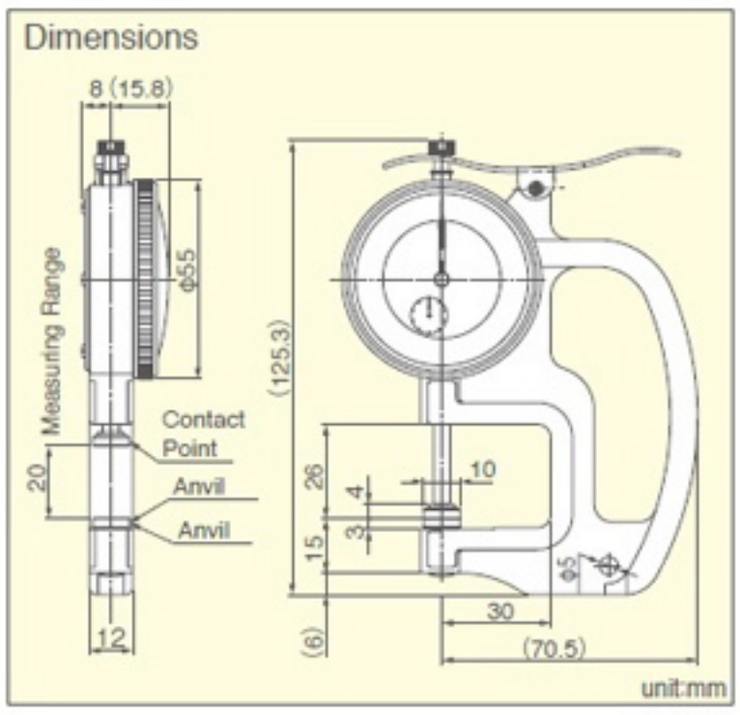

Specifications SM-528 Series

Model	Graduation (mm)	Measuring Range (mm)	Accuracy (μm)	Parallelism (μm)	Dial Reading	Measuring Force (N)	Contact Point Form (mm)	Anvil Form (mm)	Weight (g)
SM-528	0.01	20	±20	5	0-50-100	3.5 or less	φ 10 Flat	φ 10 Flat	200
SM-528LS	0.01	20	±20	—	0-50-100	3.5 or less	φ 3.2 Ball	φ 10 Flat	200
SM-528LW	0.01	20	±20	—	0-50-100	3.5 or less	φ 3.2 Ball	φ 3.2 Ball	200
SM-528-3A	0.01	20	±20	5	0-50-100	3.5 or less	φ 5 Flat	φ 5 Flat	200
SM-528-80g	0.01	20	±20	5	0-50-100	Stop Point Measuring Forced 0.8±0.05	φ 10 Flat	φ 10 Flat	200
SM-528FE	0.01	20	±20	5	0-50-100	3.5 or less	φ 10 Flat	φ 10 Flat	200

LS, LW, 3A For more information about the see (P**)

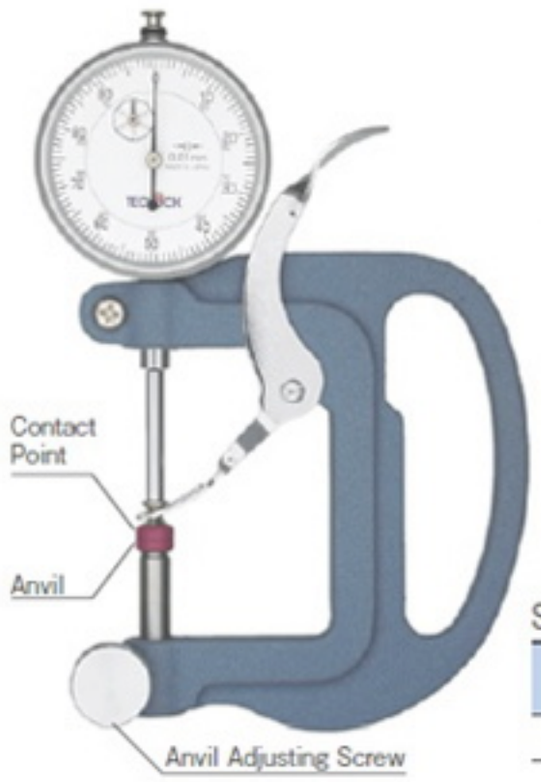

SM-130

By the lifting of the anvil, can be measured 0~50mm

Graduation 0.01mm
Measuring Range 50mm
Indication Range 30mm
(Lifting Anvil)

Upward Shockproof
Contact Point, Anvil = Ceramic
*Setting up standard point with block gauge is necessary to measure thickness 30mm and over.

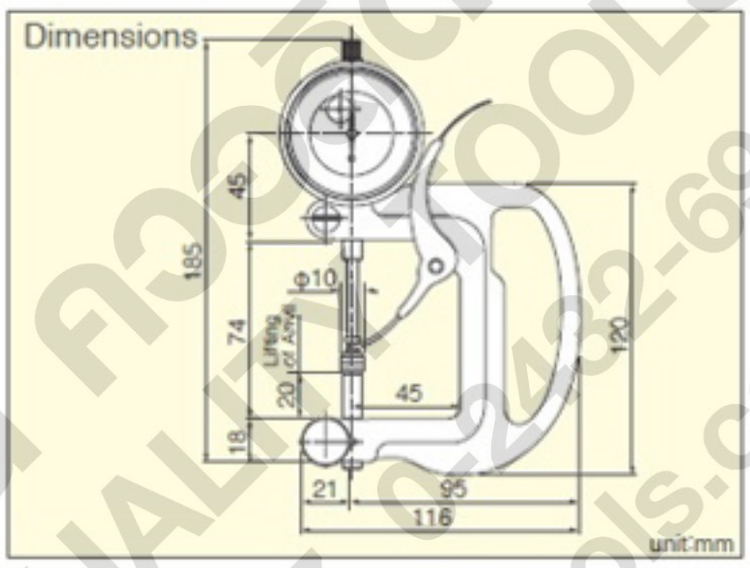

Specifications SM-130 Series

Model	Graduation (mm)	Measuring Range (mm)	Accuracy (μm)	Parallelism (μm)	Dial Reading	Measuring Force (N)	Contact Point Form (mm)	Anvil Form (mm)	Weight (g)
SM-130	0.01	50	±25	5	±0-50-100	2.2 or less	φ 10 Flat	φ 10 Flat	620
SM-130LS	0.01	50	±25	—	±0-50-100	2.2 or less	φ 3.2 Ball	φ 10 Flat	620
SM-130LW	0.01	50	±25	—	±0-50-100	2.2 or less	φ 3.2 Ball	φ 3.2 Ball	620

LS, LW For more information about the see (P**)

Dial Swift Gauges

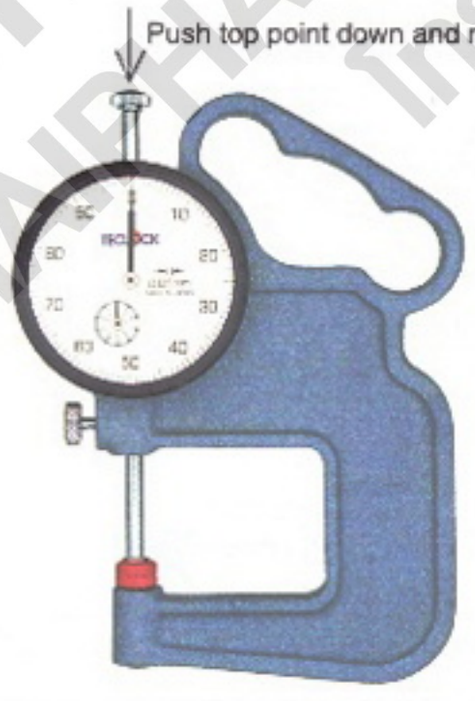

SFM-627

Graduation 0.01mm
Measuring Range 20mm
Upward Shockproof

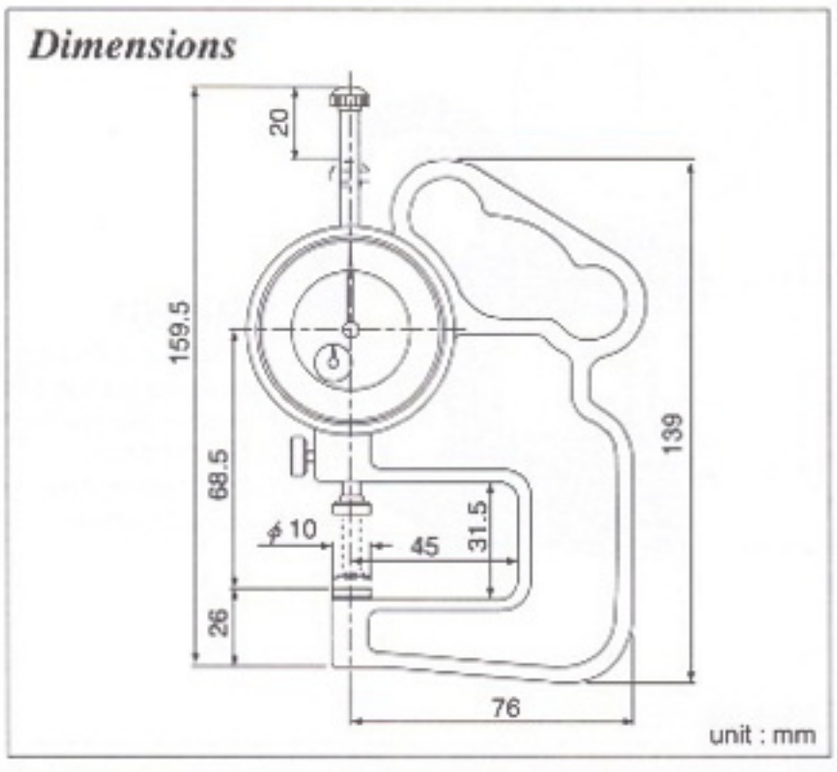

Specifications

Model	Graduation (mm)	Measuring Range (mm)	Accuracy (μm)	Parallelism (μm)	Dial Reading	Contact point form (mm)	Anvil form (mm)	Weight (g)
SFM-627	0.01	20	20	5	0-50-100	φ 10 Flat	φ 10 Flat	240

บริษัท ไทยพัฒนาเครื่องมือ จำกัด
USOL THAI PHATANASIN QUALITY TOOLS co., Ltd.
โทร. 0-2432-6833-7, 02432-6945-6
อีเมล์. info@thaitools.com

SM-114

Insertion Depth
120mm

Graduation 0.01mm
Measuring Range 10mm

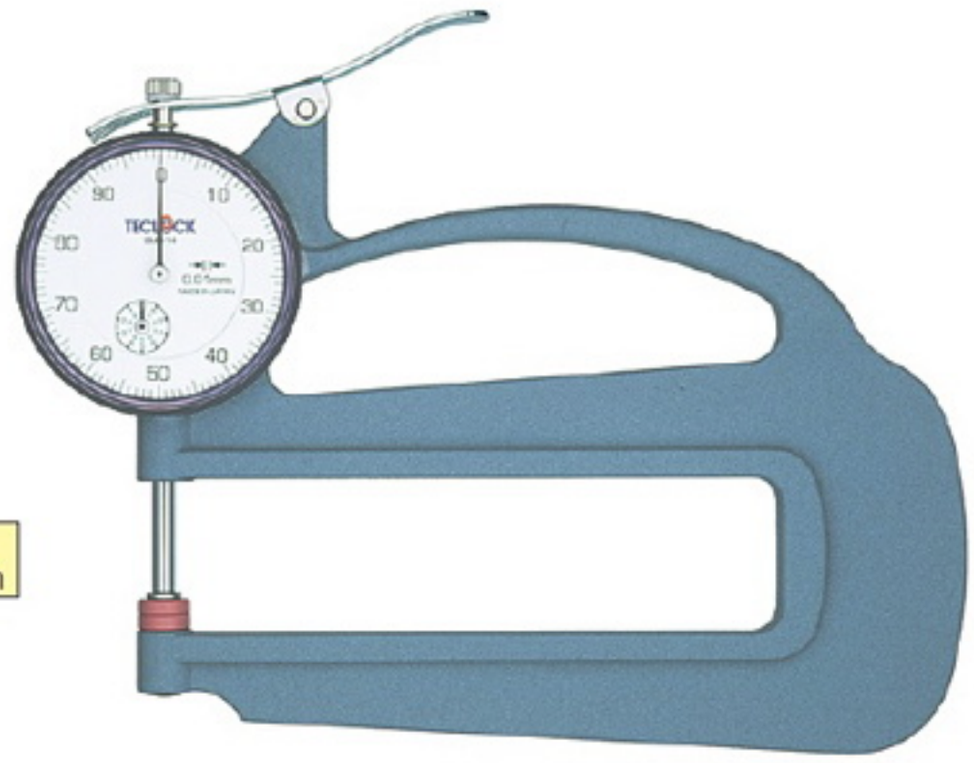

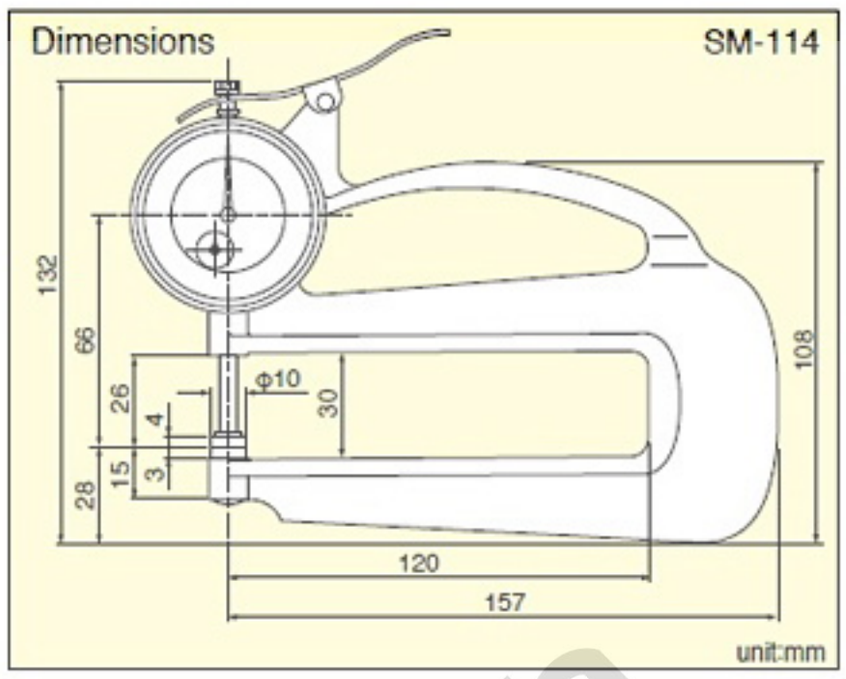

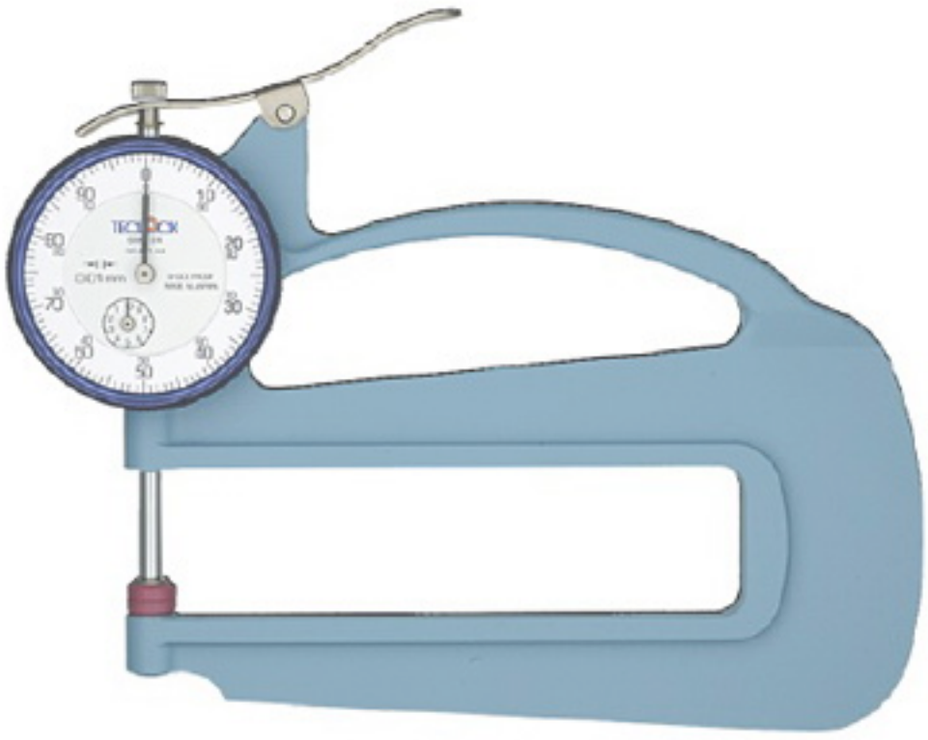

SM-124

Medium size
Thickness Gauge

Graduation 0.01mm
Measuring Range 20mm

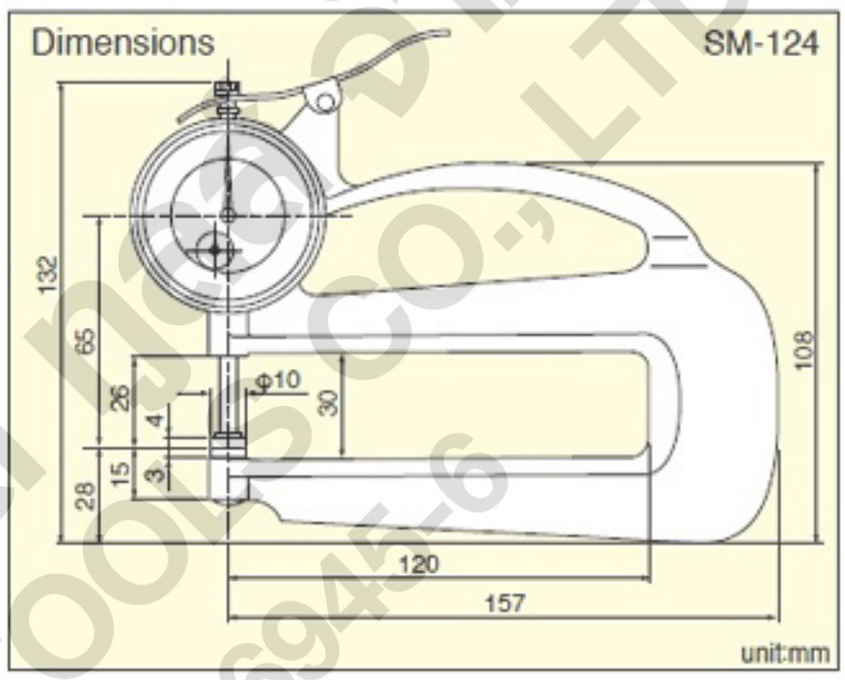

SM-125

Large size Thickness
Gauge

Graduation 0.01mm
Measuring Range 20mm

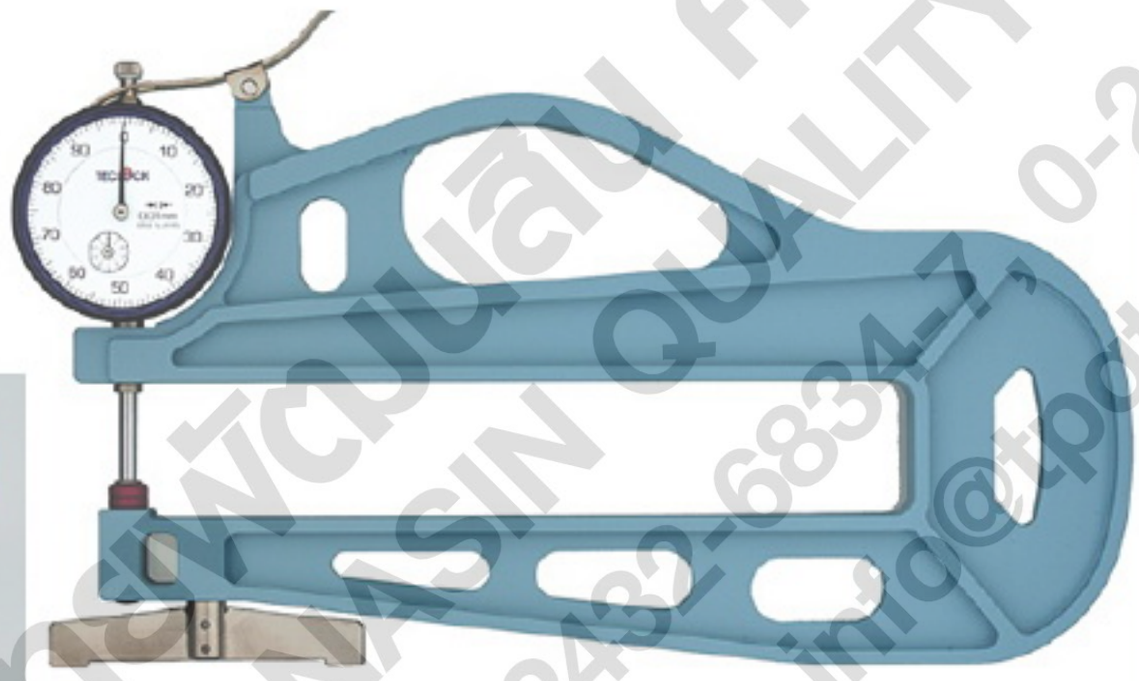

It can stand on its own with stand.

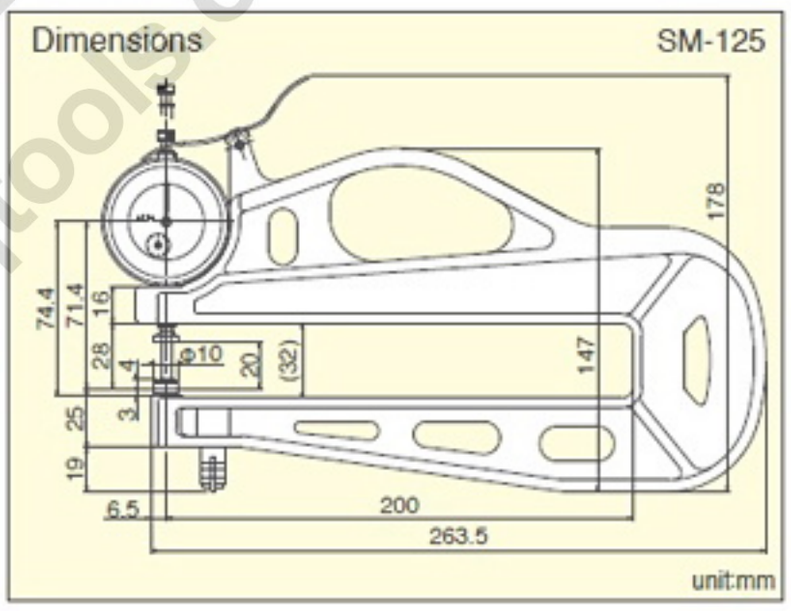

Specifications

SM-114 Series

Model	Graduation (mm)	Measuring Range (mm)	Accuracy (μm)	Parallelism (μm)	Dial Reading	Measuring Force (N)	Contact Point Form (mm)	Anvil Form (mm)	Weight (g)
SM-114	0.01	10	±15	5	0-50-100	2.5 or less	φ 10 Flat	φ 10 Flat	270
SM-114LS	0.01	10	±15	—	0-50-100	2.5 or less	φ 3.2 Ball	φ 10 Flat	270
SM-114LW	0.01	10	±15	—	0-50-100	2.5 or less	φ 3.2 Ball	φ 3.2 Ball	270
SM-114P	0.01	10	±15	5	0-0.5-1	2.5 or less	φ 10 Flat	φ 10 Flat	270

LS, LW, 3A For more information about the see (P**)

SM-124 Series

Model	Graduation (mm)	Measuring Range (mm)	Accuracy (μm)	Parallelism (μm)	Dial Reading	Measuring Force (N)	Contact Point Form (mm)	Anvil Form (mm)	Weight (g)
SM-124	0.01	20	±20	5	0-50-100	3.5 or less	φ 10 Flat	φ 10 Flat	270
SM-124LS	0.01	20	±20	—	0-50-100	3.5 or less	φ 3.2 Ball	φ 10 Flat	270
SM-124LW	0.01	20	±20	—	0-50-100	3.5 or less	φ 3.2 Ball	φ 3.2 Ball	270

LS, LW, 3A For more information about the see (P**)

SM-125 Series

Model	Graduation (mm)	Measuring Range (mm)	Accuracy (μm)	Parallelism (μm)	Dial Reading	Measuring Force (N)	Contact Point Form (mm)	Anvil Form (mm)	Weight (g)
SM-125	0.01	20	±20	5	0-50-100	3.5 or less	φ 10 Flat	φ 10 Flat	440
SM-125LS	0.01	20	±20	—	0-50-100	3.5 or less	φ 3.2 Ball	φ 10 Flat	440
SM-125LW	0.01	20	±20	—	0-50-100	3.5 or less	φ 3.2 Ball	φ 3.2 Ball	440

LS, LW, 3A For more information about the see (P**)

บริษัท ไทพัฒนสิน คิวอลิตี้ จำกัด
THAIPHATANASIN QUALITY TOOLS CO., LTD.
โทร. 0-2432-6834-7, 0-2432-6945-6
อีเมล์. info@tpqtools.com

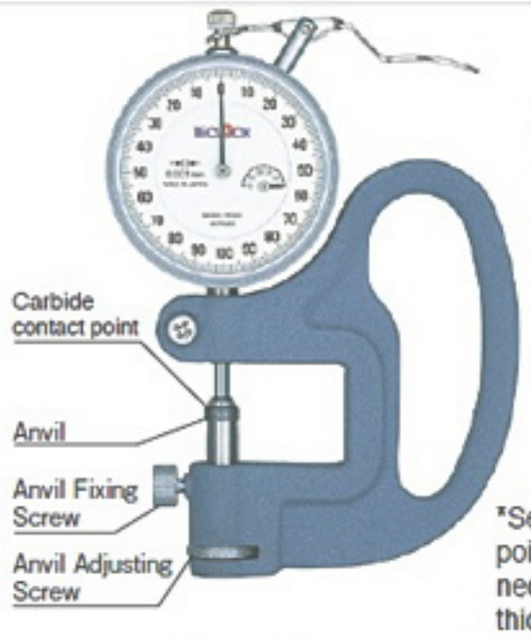

SM-1201
Symmetrical Dial

Graduation 0.001mm
Measuring Range 10mm
Indication Range 1mm
(Lifting Anvil)

Contact Point, Anvil
=Solid Carbide

*Setting up standard point with block gauge is necessary to measure thickness 1mm and over.

SM-1201L
Continuous Dial

Graduation 0.001mm
Measuring Range 1mm

Contact Point, Anvil
= Ceramic

SM-1202L

Graduation 0.001mm
Measuring Range 2mm

Contact Point, Anvil
= Ceramic

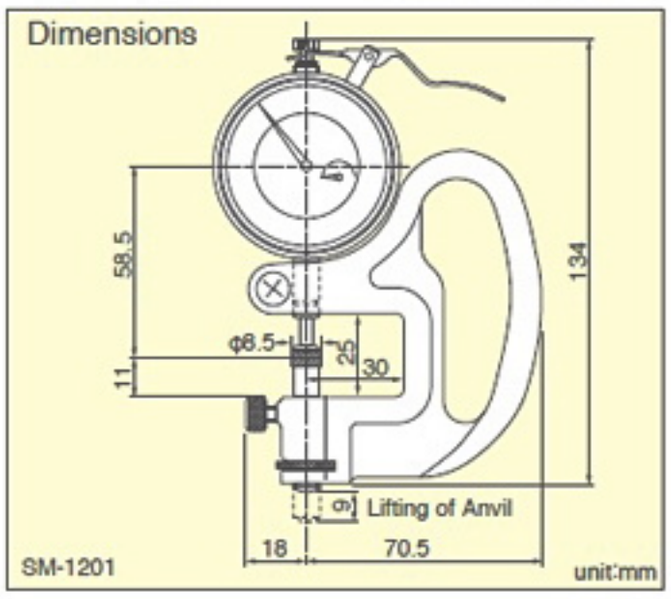

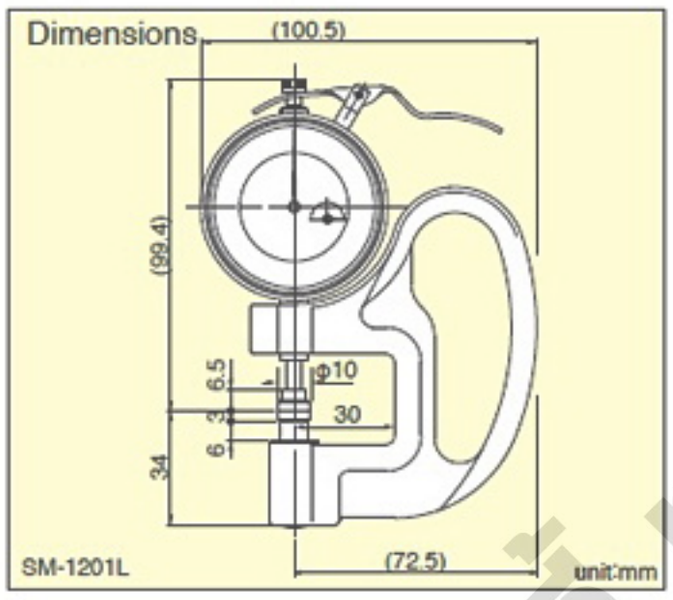

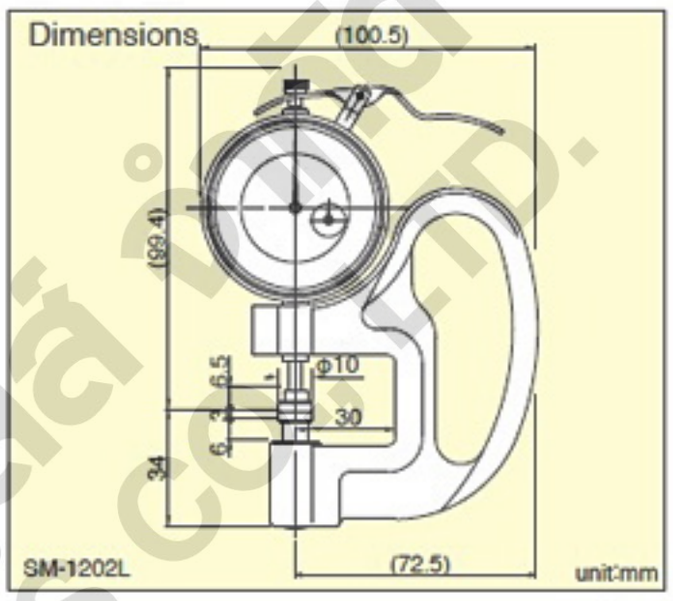

Specifications SM-1201 Series

Model	Graduation (mm)	Measuring Range (mm)	Accuracy (μm)	Parallelism (μm)	Dial Reading	Measuring Force (N)	Contact Point Form (mm)	Anvil Form (mm)	Weight (g)
SM-1201	0.001	10	±3	3	0-100-0	1.5 or less	φ 8.5 Flat (Carbide)	φ 8.5 Flat (Carbide)	440
SM-1201LS	0.001	10	±3	—	0-100-0	1.5 or less	φ 3 Ball (Carbide)	φ 8.5 Flat (Carbide)	440
SM-1201LW	0.001	10	±3	—	0-100-0	1.5 or less	φ 3 Ball (Carbide)	φ 3 Ball (Carbide)	440
SM-1201L	0.001	1(3)*	±3	3	0-100-200	1.5 or less	φ 10 Flat (Ceramic)	φ 10 Flat (Ceramic)	420
SM-1202L	0.001	2(2)*	±5	3	0-100-200	1.5 or less	φ 10 Flat (Ceramic)	φ 10 Flat (Ceramic)	420

* ( ) is a free-stroke.

LS, LW For more information about the see (P**)

TPM-116
*Suitable for measuring thickness of pipe and curved plate etc. Radial thickness can be measured up to minimum diameter φ 3.5mm.

Graduation 0.01mm
Measuring Range 10mm

Upward Shockproof
Anvil fixed type

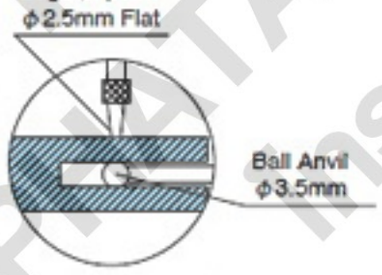

TPM-617

Graduation 0.01mm
Measuring Range 10mm

Anvil replaceable type

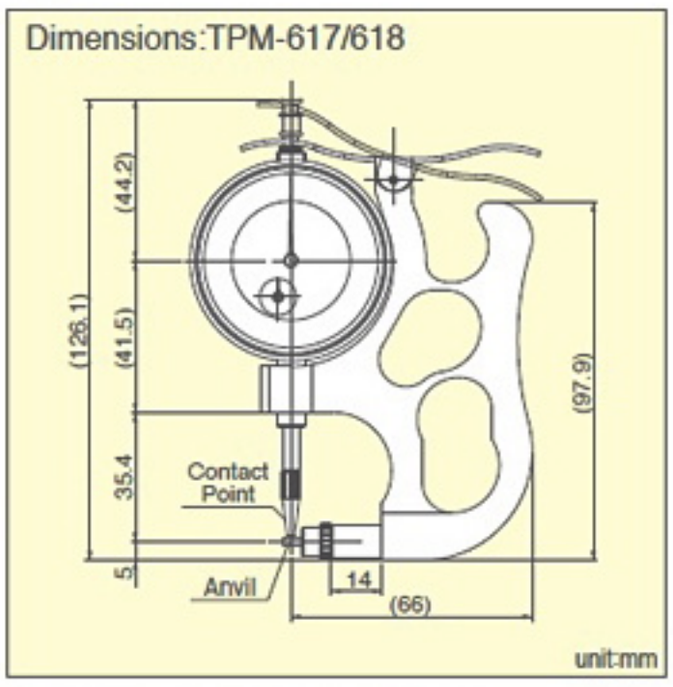

TPM-618

Graduation 0.01mm
Measuring Range 10mm

Anvil replaceable type
(option)

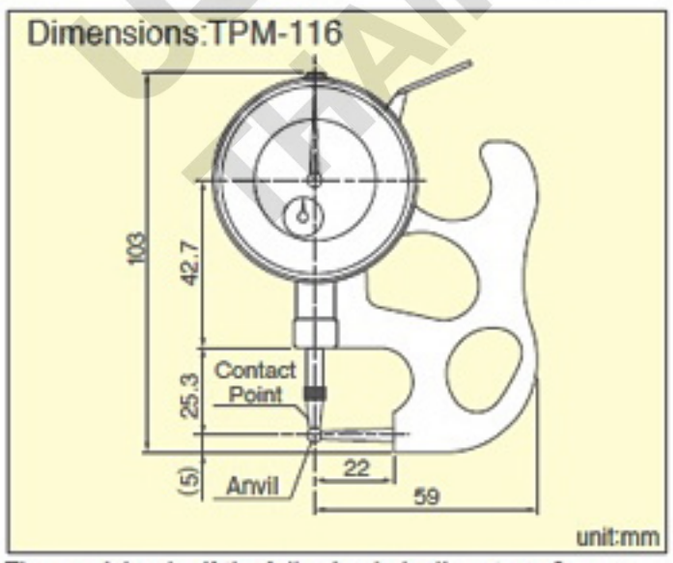

The special order if the following hole diameter φ3.5mm.

Relation between Anvil diameter and Work inserting depth

Anvil dia.	Depth	Anvil dia.	Depth
φ0.5	2mm	φ5.0	8mm
φ1.0	3mm	φ7.0	8mm
φ2.0	3mm	φ10.0	8mm

unit:mm

Specifications

Model	Graduation (mm)	Measuring Range (mm)	Accuracy (μm)	Parallelism (μm)	Dial Reading	Measuring Force (N)	Contact Point Form (mm)	Anvil Form (mm)	Weight (g)
TPM-116	0.01	10	±15	—	0-50-100	2.3 or less	φ2.5 Flat	φ 3.5 Ball	160
TPM-617	0.01	10	±15	—	0-50-100	1.5 or less	φ1.6 Ball	φ 0.5, 1.0, 2.0 replaceable	190
TPM-618	0.01	10	±15	—	0-50-100	1.5 or less	φ1.6 Ball	φ 5.0 (φ 7.0, 10.0 replaceable)*	195

*Anvils of φ7 and φ10.0 are optional.

บริษัท ไทยเนลสันแอนด์ ทูลส์ จำกัด
THAINELSON QUALITY TOOLS CO.,LTD.
Tel. 0-2432-6664-7, 0-2432-6665-6
วัฒนา. info@thtools.com

Standard Digital Thickness Gauges

- 0.01mm and 0.001mm graduation are available.
- 0.001mm model which can measure up to 15mm thickness as maximum by lifting anvil.

SMD-540
Resolution 0.01mm
Measuring Range 12mm

SMD-565
Resolution 0.001mm
Measuring Range 15mm
Indication Range 12mm
(Lifting of anvil)

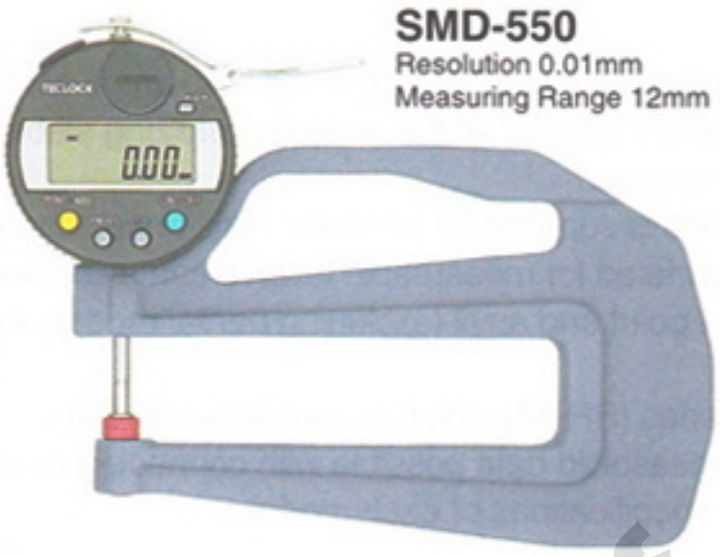

SMD-550
Resolution 0.01mm
Measuring Range 12mm

PRINTER (option)
Printer for Digital Thickness Gauges
Digital Mini-Printer SD-763P and connecting cable ZE-018.

Dimensions: SMD-540

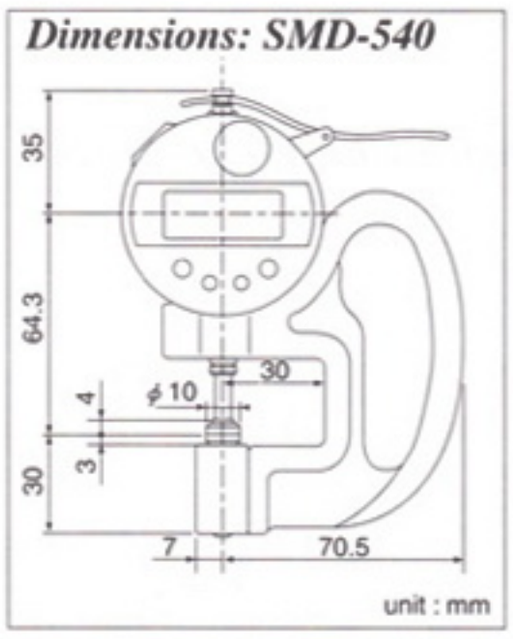

Dimensions: SMD-565

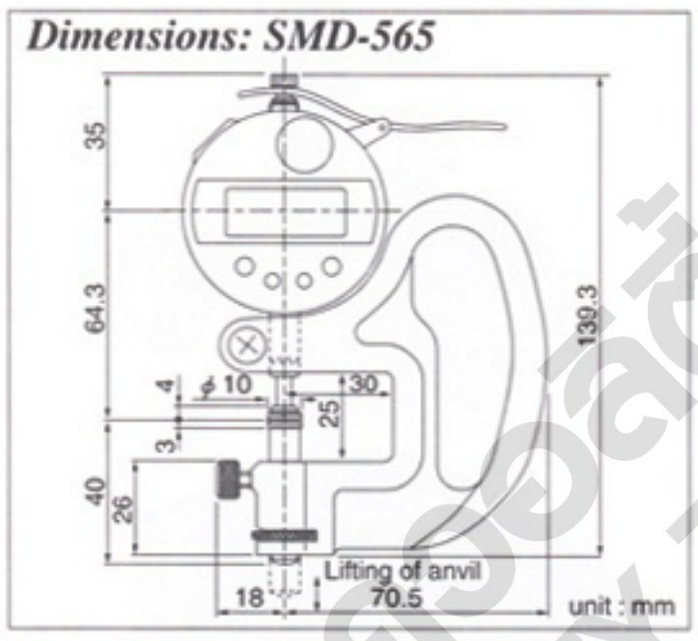

Dimensions: SMD-550

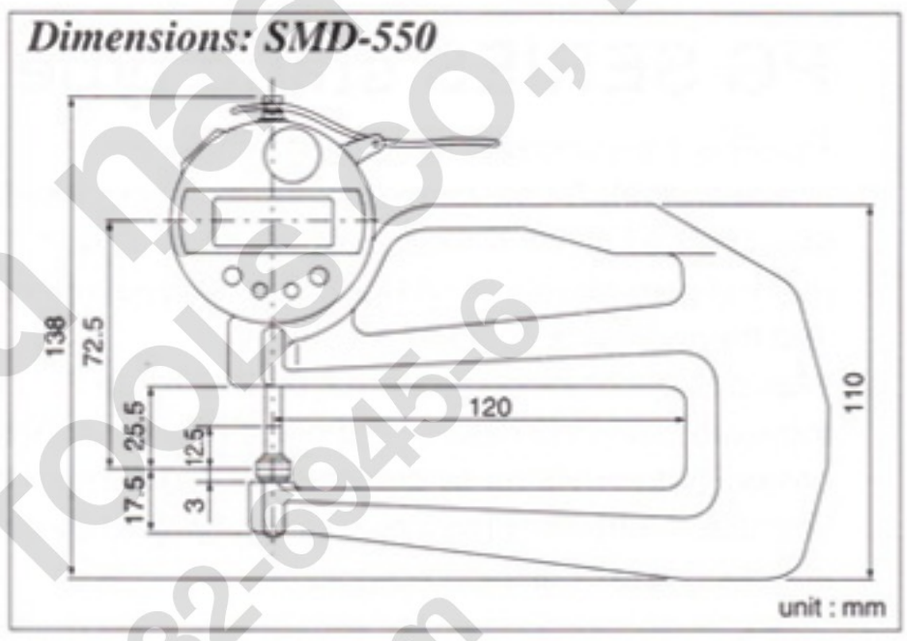

Specifications

Model	Resolution (mm)	Measuring Range (mm) ( ) : Indicating Range*1	Accuracy*2 (μm)	Parallelism (μm)	Measuring Force (N)	Contact point form / Anvil form (mm)	Weight (g)
SMD-540	0.01	12	20	5	1.0 or less	ϕ 10 Flat	290
SMD-550	0.01	12	20	5	1.0 or less	ϕ 10 Flat	440
SMD-565	0.001	15 (12)	3	3	1.5 or less	ϕ 10 Flat	470

*1 Indicating value in ( ) is a measuring range of digital sensor. *2 The quantizing error is not included.

SMD-565L
Conversional type of Model : SMD-565 but without Anvil Adjustment.
Resolution 0.001mm
Measuring Range 12mm

Dimensions

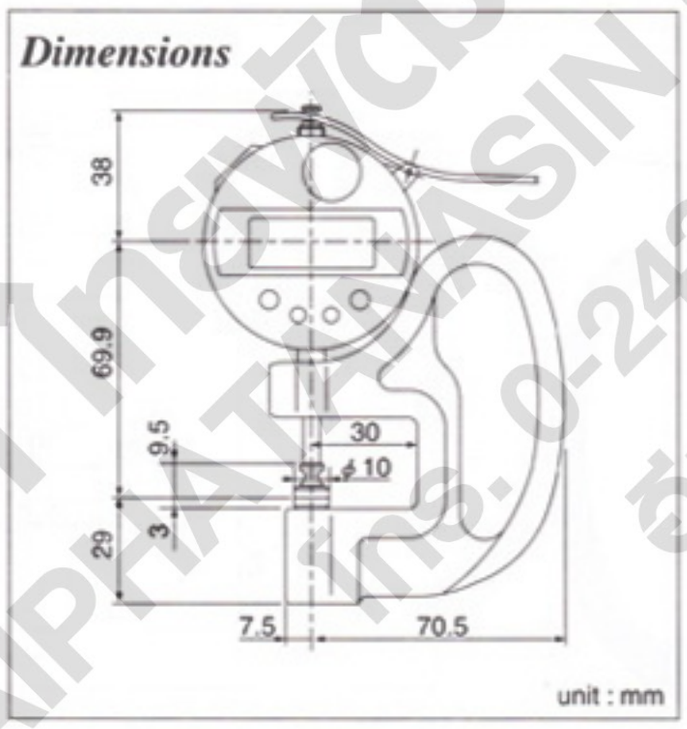

SMD-130
Long stroke digital Thickness Gauge.
Resolution 0.01mm
Measuring Range 50mm
Indication Range 25mm
(Lifting of anvil)

Dimensions

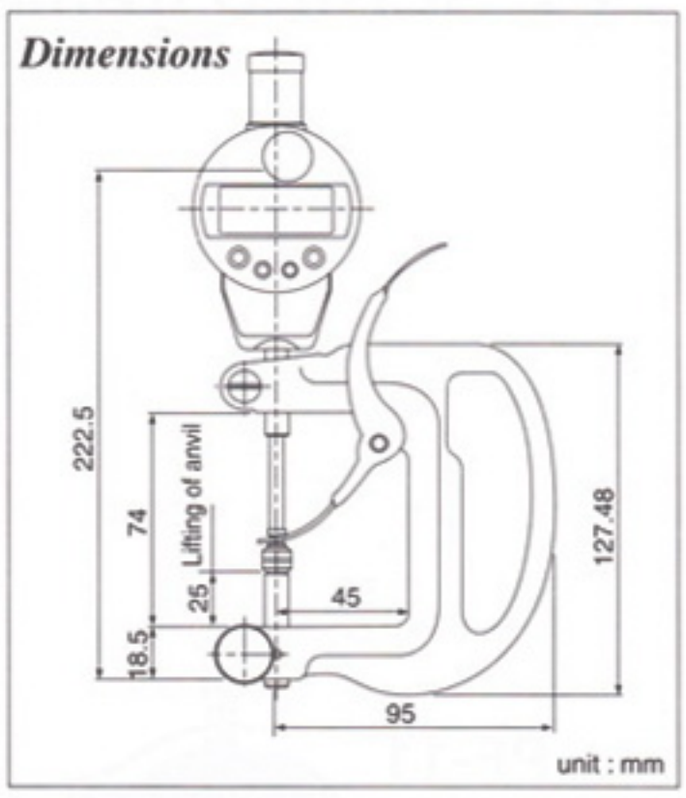

Specifications

Model	Resolution (mm)	Measuring Range (mm) ( ) : Indicating Range*1	Accuracy*2 (μm)	Parallelism (μm)	Measuring Force (N)	Contact point form (mm)	Anvil form (mm)	Weight (g)
SMD-565L	0.001	12	3	3	1.5 or less	ϕ 10 Flat	ϕ 10 Flat	410
SMD-130	0.01	50 (25)	30	5	2.0 or less	ϕ 10 Flat	ϕ 10 Flat	610

*1 Indicating value in ( ) is a measuring range of digital sensor. *2 The quantizing error is not included.

บริษัท ไทยพัฒนา ฟิสแอนด์ ทูลส์ จำกัด
THAIPHATTANASIN QUALITY Tools Co., LTD.
โทร. 0-2432-6945-6
อีเมล์: info@qtools.com

Conventional Digital Thickness Gauges

- Digital display for error-free reading

SMD-550S
Resolution 0.01mm
Measuring Range 12mm

SMD-540S
Resolution 0.01mm
Measuring Range 12mm

Dimensions: SMD-550S

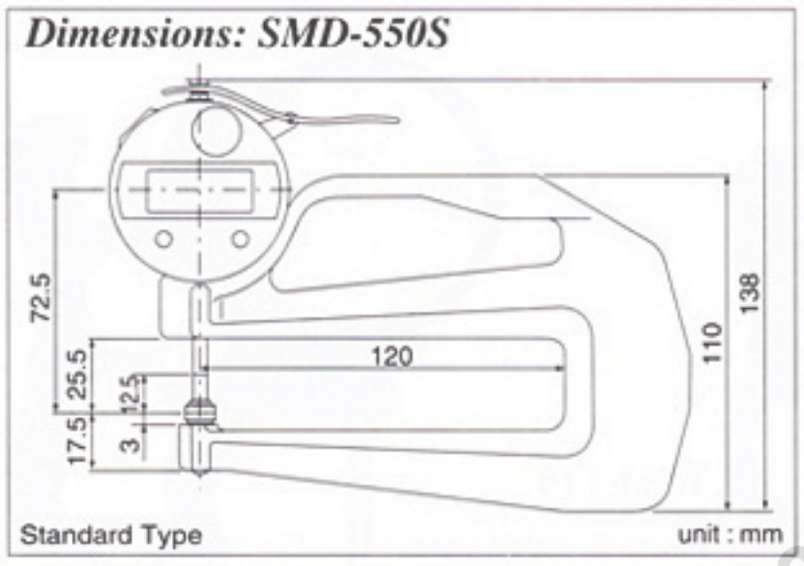

Dimensions: SMD-540S

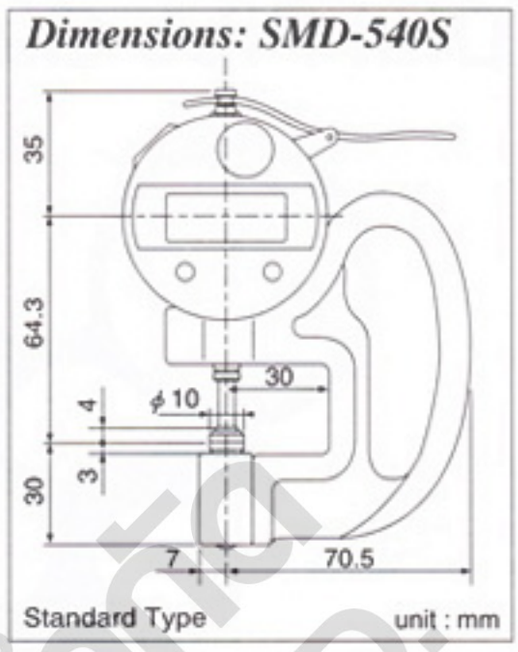

Specifications

SMD-540S SERIES

Model	Resolution (mm)	Measuring Range (mm)	Accuracy* (μm)	Parallelism (μm)	Measuring Force (N)	Contact point form (mm)	Anvil form (mm)	Weight (g)
SMD-540S	0.01	12	20	5	2.0 or less	ϕ 10 Flat	ϕ 10 Flat	250
SMD-540S-LS	0.01	12	20	—	2.0 or less	ϕ 3.2 Ball	ϕ 10 Flat	250
SMD-540S-LW	0.01	12	20	—	2.0 or less	ϕ 3.2 Ball	ϕ 3.2 Ball	250
SMD-540S-3A	0.01	12	20	5	2.0 or less	ϕ 5 Flat	ϕ 5 Flat	250

SMD-550S SERIES

SMD-550S	0.01	12	20	5	2.0 or less	ϕ 10 Flat	ϕ 10 Flat	400
SMD-550S-LS	0.01	12	20	—	2.0 or less	ϕ 3.2 Ball	ϕ 10 Flat	400
SMD-550S-LW	0.01	12	20	—	2.0 or less	ϕ 3.2 Ball	ϕ 3.2 Ball	400
SMD-550S-3A	0.01	12	20	5	2.0 or less	ϕ 5 Flat	ϕ 5 Flat	400

Thickness measuring method for tested piece for physical test such as rubber, heat plasticity Elastomer, plastic film, cloth, textile, leathers are ruled in detail by JIS or ISO. PG/PF series are digital type thickness measuring instrument in compliance with these major standard.
Stand type (fixed type) and frame type (handy type) are widely used for test & research dept., quality control dept. and manufacturing dept.

Features

- Wide range of line-up complying with various standard of the field are available.
- High accuracy digital type with weight type for all the versions realizing stable static load, which is not got by analog type utilizing gears or springs.
- PG series uses micro-granite which is superior for abrasion resistance , chemical resistance , impact resistance in addition to high unstriated for measurable table. It can avoid scratches and stains for metal.
- Stainless steel is used for contact point and anvil (excluding partial model). Acid resistance , alkali proof, water resistance are improved.
- Power source is silver oxide batteries (SR-44) which is convenient to carry.
- This makes treating statistics of measured data possible with connected to optional printer SD-763P.
- Contact point and measuring pressure can be changed. (However, it is not equivalent to standard)
- Please refer to the next page for specifications of each model.

PG Series stand type

PG-20J

JIS K 6250 Method A

PG-20 is the thickness measuring instrument compliant with A Law for measuring thickness which is standardized in JIS K 6250 (ruled in physical test method general rule of rubber for vulcanized rubber and thermoplastic rubber.)
This is sheet block compatible type which can measure both thickness of test piece hardness IRHD below 35 and over 35 by this one unit.
Contact point is diameter 5mm and pressure can be changed by only attaching and detaching weights.

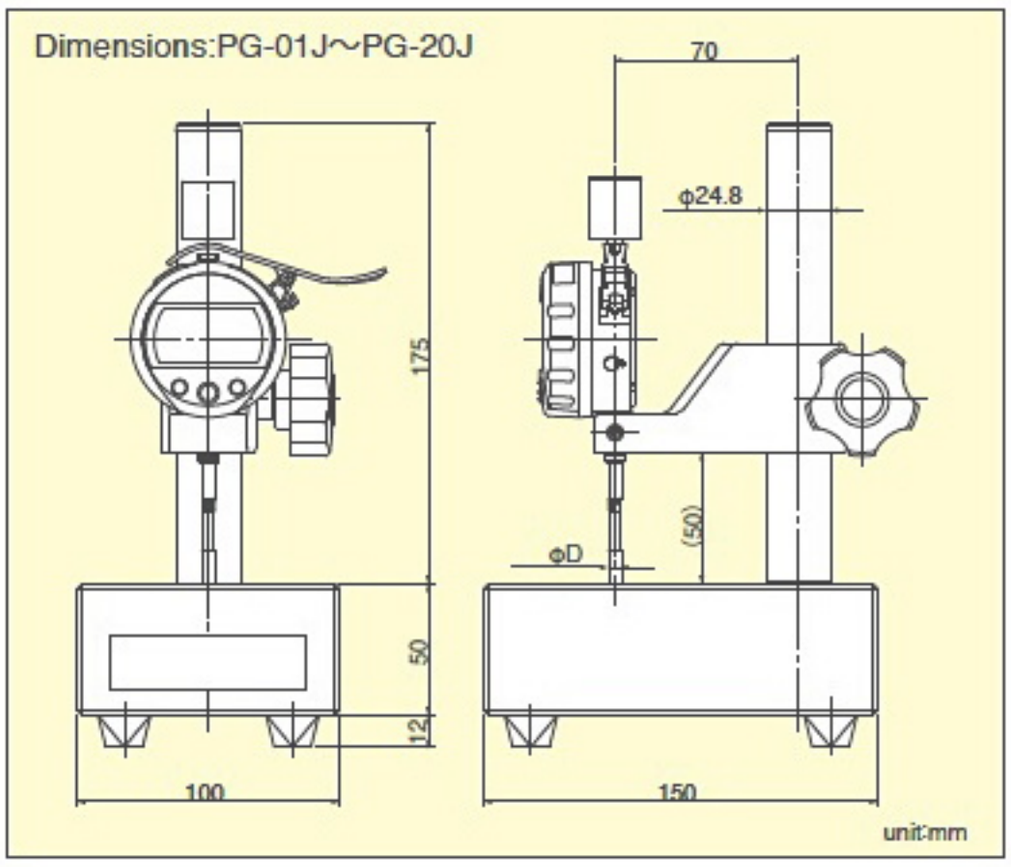

บริษัท ไทยพัฒนาสินคุณภาพ จำกัด
THAIPATANASIN QUALITY TOOLS CO.,LTD.
Tel.No. 0-2432-6834-7 , 0-2432-6945-6
อีเมล์ info@tpqtools.com

PF Series frame type

PF-02J

PF-11J

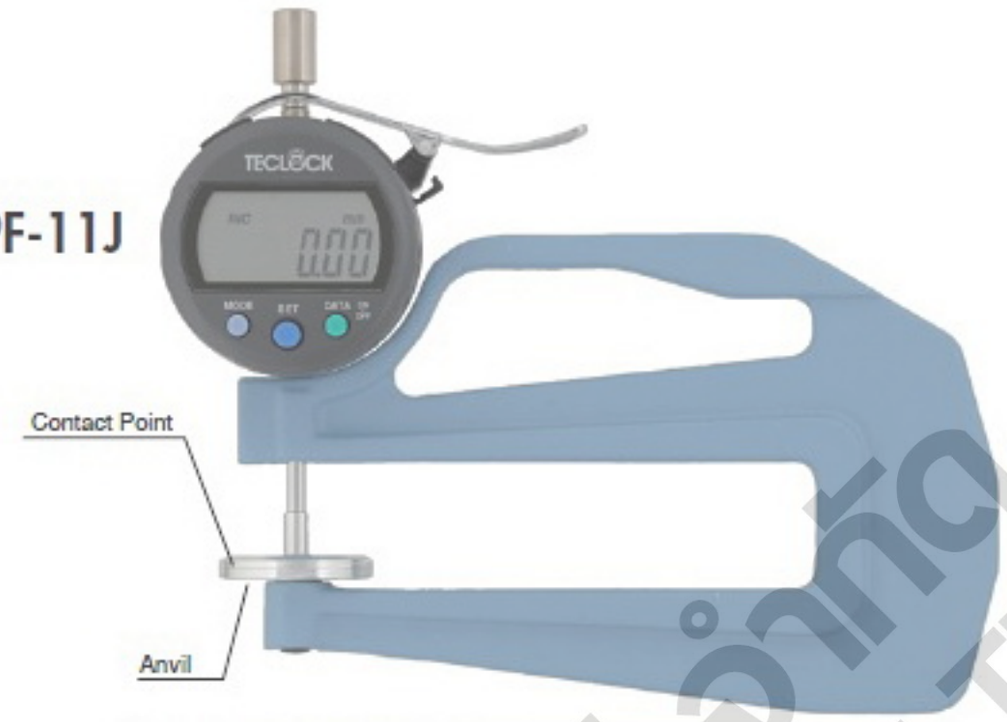

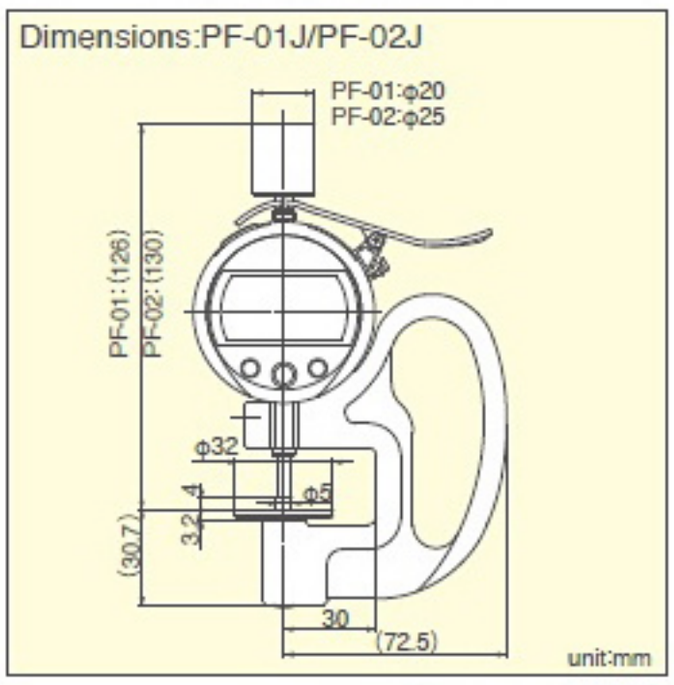

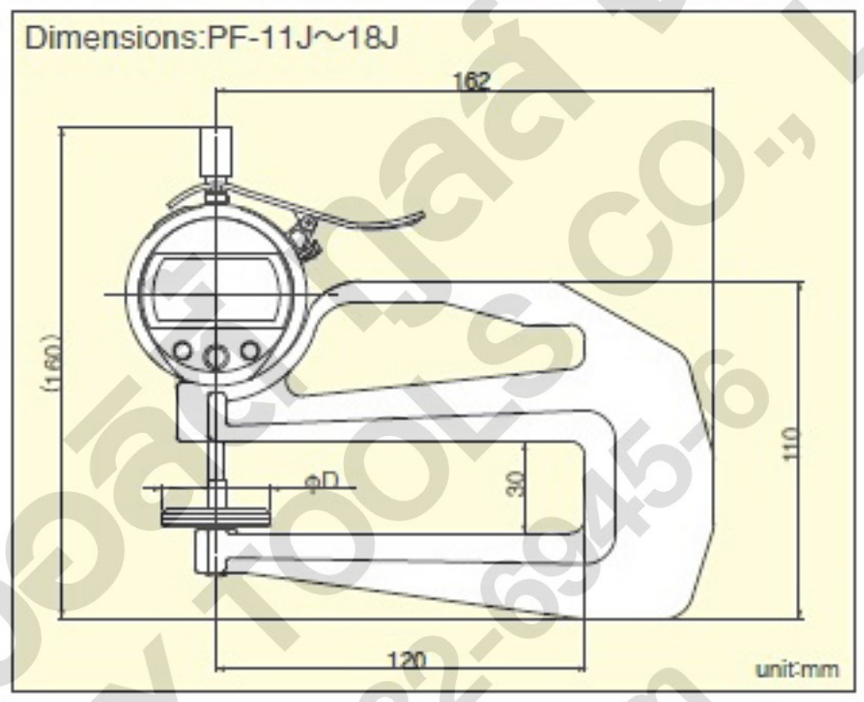

Specifications

Model		Reference standard		Resolution (mm)	Measuring range (mm)	Load (Measuring Force)	Contact point φ D (mm)	Measured pressure
Stand-type	Frame-type	JIS	Measured item					
PG-01	PF-01	K6732-1996	poly vinyl chloride films for agriculture	0.001	12	0.8N (80gf) or less	φ 5	
PG-02	PF-02	K6783-1994	ethylene / vinyl acetate copolymer films for agriculture	0.001	12	1226 ± 143mN (125gf ± 15gf)	φ 5	
		Z1702-1994	polyethylene films for packaging					
		Z1709-1995	heat shrinkable plastic films for packaging					
PG-11	PF-11	K6400-1997	flexible polyurethane foam	0.01	12	0.363N (37gf)	φ 35.7	0.363kPa (3.7gf/cm²)
PG-12	PF-12	K6301-1995	vulcanized rubber	0.01	12	0.785N (80gf)	φ 5	
PG-13	PF-13	K6328-1999	rubber coated fabrics	0.01	12	0.785N (80gf)	φ 10	
		K6250-2001	rubber / for A method (less than IRHD 35)					
PG-14	PF-14	L1086-1999	fusible interlining fabrics (non woven textile)	0.01	12	0.394N (40gf)	φ 16	2kPa (20gf/cm²)
PG-15	PF-15	L1086-1999	fusible interlining fabrics (ordinary textile)	0.01	12	2.35N (240gf)	φ 11.3	23.5kPa (240gf/cm²)
		L1096-1999	woven fabrics (ordinary textile)					
PG-16	PF-16	L1018-1999	knitted fabrics (ordinary knit)	0.01	12	0.343N (35gf)	φ 25.2	0.7kPa (7gf/cm²)
		L1086-1999	fusible interlining fabrics (ordinary knitting fabric)					
		L1096-1999	woven fabrics (crinose textile)					
PG-17	PF-17	K6505-1995	man-made upper material of shoes	0.01	12	3.85 ± 0.1N (390gf ± 10gf)	φ 10	49.03 ± 1.177kPa (500 ± 12gf/cm²)
		K6550-1994	leathers					
PG-18	PF-18	K6250-2001	rubber A method (IRHD 35 and over)	0.01	13	0.431N (44 ± 10gf)	φ 5	(IRHD 35 and over) 22 ± 5kPa (2.24 ± 0.51gf/mm²)
PG-20	———	K6250-2001	rubber A method for both (less than IRHD 35, IRHD 35 and over)	0.01	13	0.196 ± 0.038N (20 ± 3.9gf)	φ 5	(Less than IRHD 35) 10 ± 2kPa (1.02 ± 0.20gf/mm²)
						0.431 ± 0.098N (44 ± 10gf)		(IRHD 35 and over) 22 ± 5kPa (2.24 ± 0.51gf/mm²)

Aluminium alloy is used for material of contact point (including anvil) of PG-11 and PF-11. Contact point for other model are all stainless steel.
PG-13 and PF-13 can be also used for IRHD below 35 of JIS K 6250 A law.

USUN MAYOUWA THAIPHATNASIN QUALITY TOOLS CO., LTD. Tel. 0-2432-6834-7, 0-2432-6945-6 Line: @tpqtools