Bolted bonnet, Outside screw-and-yoke, Rising stem, Non-rising handwheel, Flexible wedge.

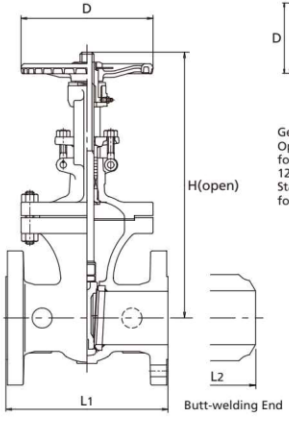

300SCLS

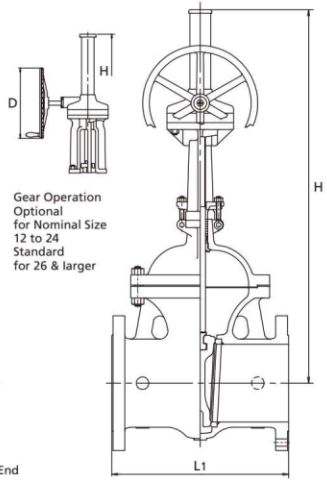

G-300SCLS

Fig	End Connections
300SCLS	RF-flanged ends.
W300SCLS	Butt-welding ends.

Standard materials of parts

Parts	Materials
Body	ASTM A216 Gr.WCB
Bonnet	ASTM A216 Gr.WCB
Stem	ASTM A182 Gr.F6a
Disc	13Cr/Carbon Steel+13Cr
Body seat ring	Carbon Steel+HF*
Gland	ASTM A182 Gr.F6a
Gland packing	Flexible Graphite
Gland flange	ASTM A105/A216 Gr. WCB
Handwheel	Ductile iron
Gasket	See Page 6
Bonnet bolt/nut	ASTM A193 Gr.B7/A194 Gr.2H
Gland bolt/nut	ASTM A576 Gr.1045/A194 Gr.2H
Bonnet bushing	ASTM A182 Gr.F6a
Yoke sleeve	ASTM A439 Tp.D2
Grease nipple	Carbon steel

*Hard facing with Co-Cr-W Alloy.
Note: Refer to Page 5&6 for standard seat material and construction.

Dimensions

Nominal Size		1 1/2	2	2 1/2	3	4	5	6	8	10	12	14	16	18	20	22	24	26	28	30	32	34	36
		40	50	65	80	100	125	150	200	250	300	350	400	450	500	550	600	650	700	750	800	850	900
L_1	in	7.50	8.50	9.50	11.14	12.00	15.00	15.86	16.50	18.00	19.76	30.00	33.00	36.00	39.00	43.00	45.00	49.00	53.00	55.00	60.00	64.00	68.00
	mm	190	216	241	283	305	381	403	419	457	502	762	838	914	991	1092	1143	1245	1346	1397	1524	1626	1727
L_2	in	—	8.50	9.50	11.14	12.00	15.00	15.86	16.50	18.00	19.76	30.00	33.00	36.00	39.00	43.00	45.00	49.00	53.00	55.00	60.00	64.00	68.00
	mm	—	216	241	283	305	381	403	419	457	502	762	838	914	991	1092	1143	1245	1346	1397	1524	1626	1727
H	in	16.3	16.3	18.0	20.9	24.3	27.3	31.2	39.9	47.9	56.6	61.5	69.5	76.1	84.1	93.1	100.1	112.0	123.8	131.3	143.7	150.0	153.5
	mm	413	413	456	530	618	694	793	1014	1216	1458	1563	1766	1932	2137	2364	2542	2845	3145	3335	3650	3810	3900
D	in	7.9	7.9	7.9	9.8	9.8	11.8	13.8	15.7	17.7	23.6	23.6	23.6	26.8	29.9	29.9	35.8	23.6	23.6	23.6	23.6	23.6	23.6
	mm	200	200	200	250	250	300	350	400	450	600	600	680	680	760	760	910	600	600	600	600	600	600