Error Free Dial Gauge MU 52 ST – SI

shockproof, with overtravel

Except for the limited measuring range all technical features of model MU 52 ST – SI are the same as for model MU 52 ST shown on catalogue page 12.

The bezel of model MU 52 ST – SI can be rotated through 360°.

Spindle and stem are made of resistant stainless steel. The spindle is lapped.

Error Free Dial Gauge MU 52 ST - SI shockproof, with overtravel	
Reading	0.01 mm
Range	0.8 mm
Overtravel	7 mm
Bezel-Ø	58 mm
Stem-Ø	8 h 6
Dimensions and accuracy according to DIN EN ISO 463/DIN 878	
Initial measuring force	0.6 N ± 20%
Dimensioned drawing	page 51
Data sheet to DIN EN ISO 463	www.kaefer-messuhren.de

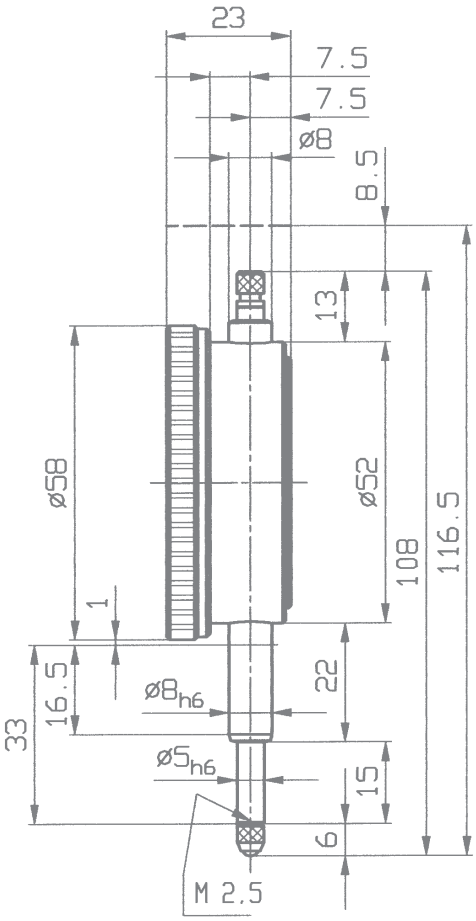

Special fittings: