Synergy Asia Solution

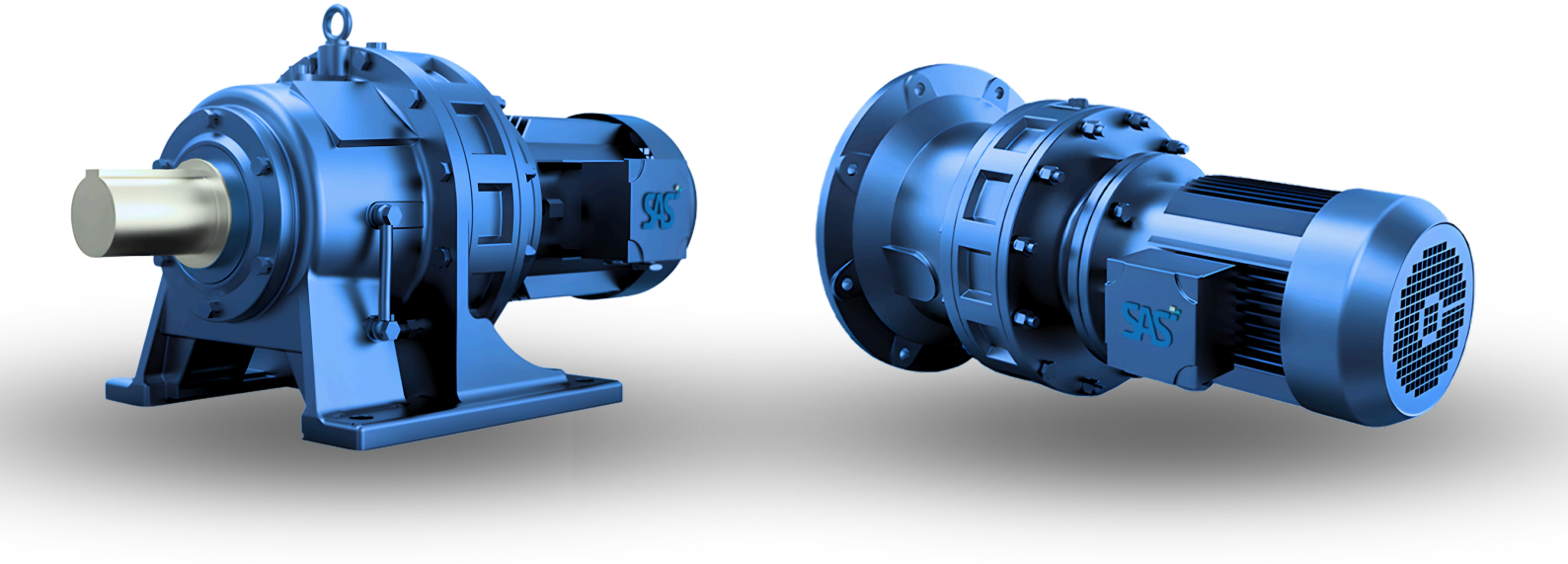

CYCLOIDAL REDUCER

1 Product Overview

1.1 Product features

The cycloidal reducer is based on JB/T2982. It adopts the principle of planetary transmission with few gear differences and a novel transmission mechanism with cycloidal needle and gear meshing, which is widely applied in the fields of textile printing and dyeing, light industry and food, metallurgical miners, petrochemicals, lifting and transportation, and engineering machinery as a driving and deceleration device.

1) High ratio and high efficiency

Single-stage transmission can achieve a reduction ratio of 1: 87, and the efficiency is over 90%. The reduction ratio is even greater if multi-stage transmission is used.

2) Compact structure and small volume

The planetary transmission principle is adopted, and the input shaft and the output shaft are on the same axis, so the structure is compact and the volume is small.

3) Easy assembly,disassembly,and maintenance

The structure design is reasonable, the assembly and disassembly are simple, and the maintenance is convenient.

4) Smooth operation and low noise

The cycloidal pin gear has a large number of teeth in engagement, a large overlap coefficient and a mechanism of smooth machine parts, so that the vibration and noise are controlled to a minimum.

5) Reliable service and long life

The main transmission meshing parts are made of bearing steel, which has good mechanical properties, smooth rolling friction, and is more durable and long life.

6) Strong overload capacity, impact resistance and small moment of inertia.

It is suitable for occasions with frequent starting and forward and reverse rotation.

1.2 Internal structure

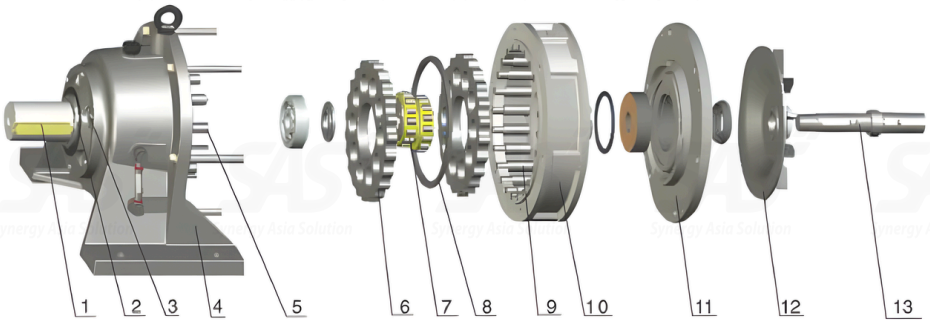

1. output shaft
2. tight ring of output shaft
3.small end cap
4.engine base
5.pin bush of pin roll
6. cycloidal wheel
7.eccentric bearing
8.spacer ring
9. set of pin gear
10.shell of pin gear
11.big end cap
12.fan cover
13.input shaft

1.3 List of models

Level 1	Series B	09	0	1	2	3	4		5	6	7	8	9	
	Series X	1	2	3	4	5	6	7	8	9	10	11	12	
Level 2	Series B	10	20	31	41	42	52	53	63	64	74	84	85	95
	Series X	32	42	53	63	64	84	85	95	96	106	117	118	128
Level 3	Series B	2009	320	420	531	631	742	852	953					
	Series X	421	542	642	853	953	1064	1184	1285					

1.4 Model expression method

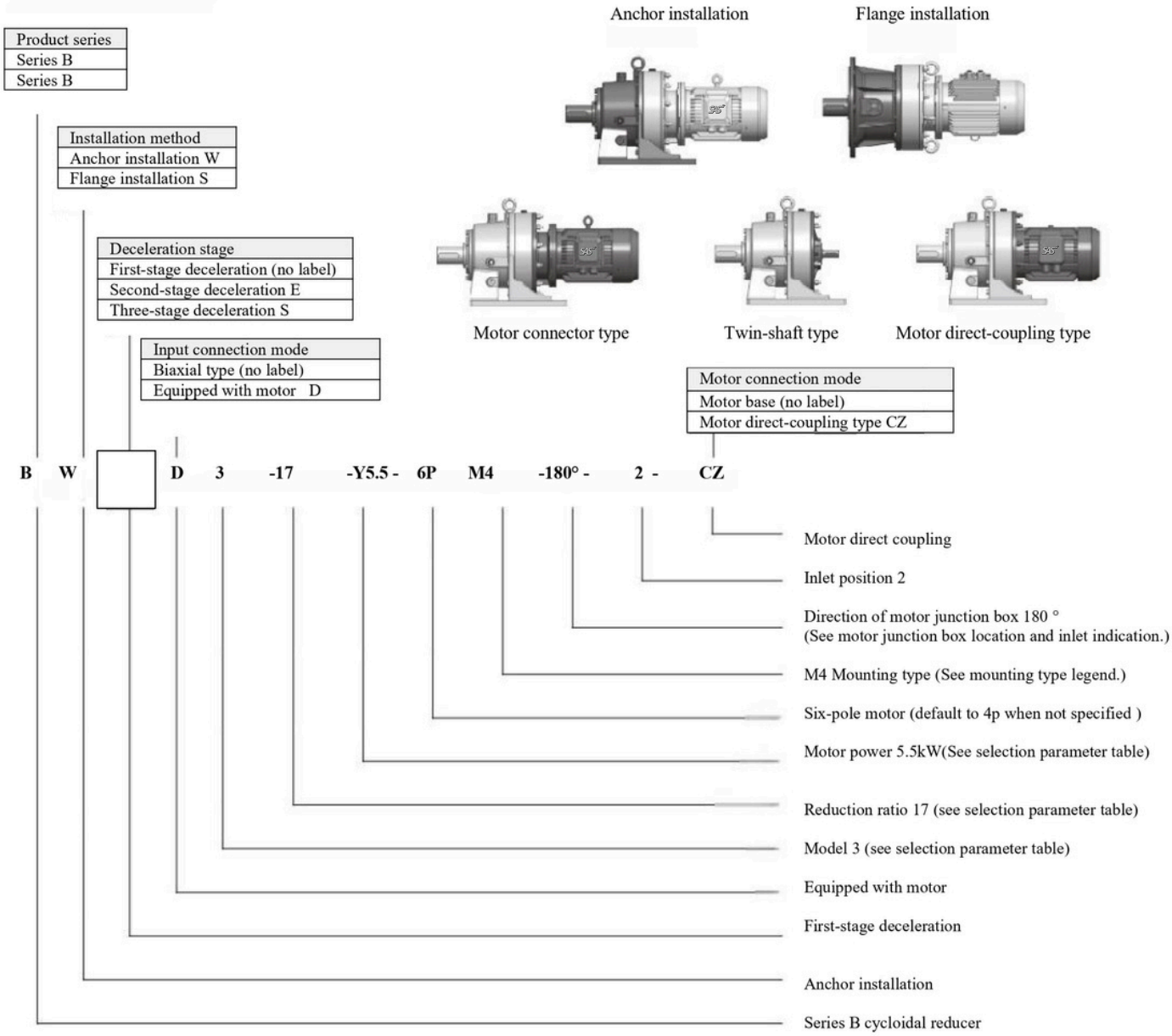

1.5 Overview of reduction ratio

Level 1	7	9	11	13	15	17	19	23
	29	35	43	59	71	87		
Level 2	99 (11×9)	121 (11×11)	187 (17×11)	289 (17×17)	319 (29×11)	391 (23×17)	493 (29×17)	595 (35×17)
	649 (59×11)	731 (43×17)	841 (29×29)	1003 (59×17)	1225 (35×35)	1357 (59×23)	1505 (43×35)	1849 (43×43)
	2065 (59×35)	2537 (59×43)	3053 (71×43)	3481 (59×59)	4189 (71×59)	5133 (87×59)	6177 (87×71)	7569 (87×87)
Level 3	8041～658503							

Notes: 1. The reduction ratio provided by the first-stage transmission can be combined with the second-stage and third-stage transmissions;
2. The general combination principle of second-stage and third-stage reduction ratios is: the high-speed end is the end with the smaller reduction ratio, and the low-speed end is the end with the larger reduction ratio.

1.6 Configuration of motor junction box position and expression method of wire inlets

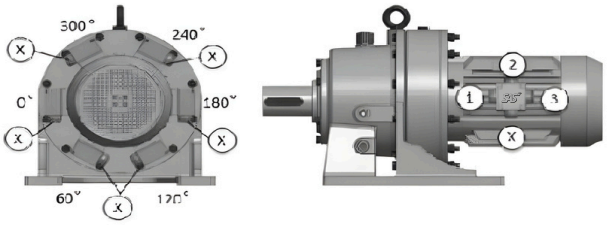

Motor direct-coupling type

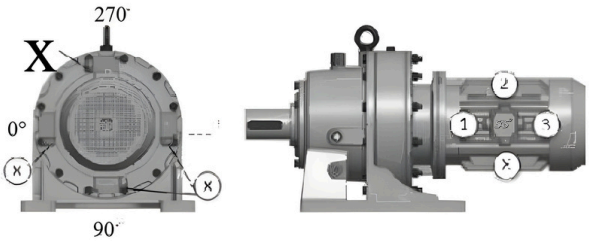

Motor base

Notes:

1. When the direction of the junction box is not indicated, it defaults to the 0 ° position in the diagram; It defaults to the X position when the inlet position is not specified;
2. The direction of the junction box in the diagram is a commonly used configuration, please use it first;
3. The above picture is also applicable to secondary and tertiary transmission models.
4. Please contact the technical department of our company if you have any other special requirements.

1.7 Legend of mounting mode

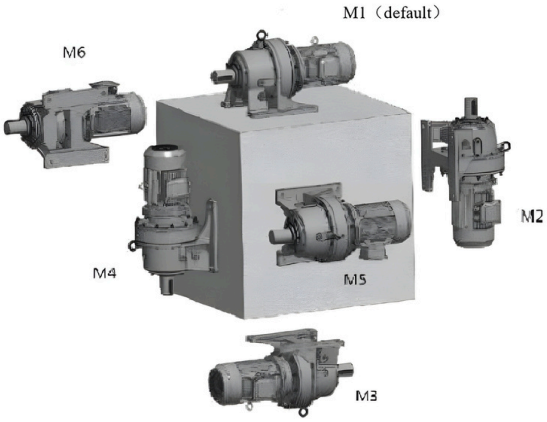

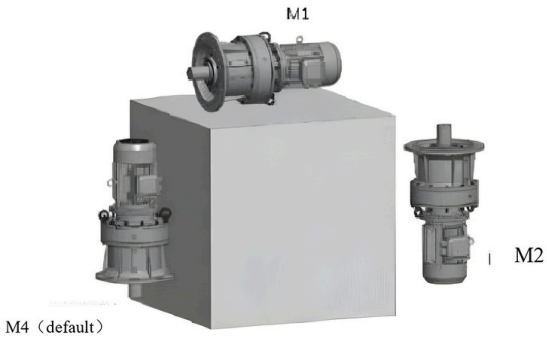

Note: When mounted on the ground,M1is the default installation type; M4 is the default installation style when flanged installation. (It can be ignored when writing model number) Please give priority.

1.8 Comparison table of various standard models of reducer

Reducer standard	Level 1												
JB/T2982-94A	X1	X2	X3	X4	X5	X6	X7	X8	X9	X10	X11	X12	
JB/T2982-94B	B09	B0	B1	B2	B3	B4		B5	B6	B7	B8	B9	
JB/T2982-81		B12	B15	B18	B22	B27		B33	B39	B45	B55	B65	
Shanghai Standard	B10A	B10	B11	B12	B13	B14	B14A	B15	B16	B17	B18	B19	
			B11A	B12B	B13B				B16B				
Reducer standard	Level 2												
JB/T2982-94A	X32	X42	X53	X63	X64	X74	X84	X85	X95	X96	X106	X117	X118	X128
JB/T2982-94B	B10	B20	B31	B41	B42		B52	B53	B63	B64	B74	B84	B85	B95
JB/T2982-81	B1512	B1812	B2215	B2715	B2718		B3318	B3322	B3922	B3927	B4527	B5527	B5533	B6533
Shanghai Standard	B110A	B120A	B131A	B141A	B142A		B152	B153	B163	B164	B174	B184A		B195

Note: The performance indexes of corresponding machine models of various standards are basically the same, but the shape, installation and connection dimensions are slightly different. The above models can be produced by our company, please give priority to JB/T2982 standard products.

2 Selection Information

2.1 Selection steps

1.Selection of installation method

It is generally determined by the user according to the installation arrangement.

2. Determination of actual working condition coefficient f_A

1) General requirements for use

f_A It is mainly determined by the load characteristics, working time and start-stop times of the working machine. Namely:$f_A = f_{Ah} \times f_{Ac.}$

Wherein f_{Ah} is a working condition coefficient determined by two factors: load characteristics and working time. The f_{Ah} for commonly used machines can be selected with reference to the working condition factor f_{Ah}. The working condition coefficients of other working machines can be determined by analogy.

Wherein f_{Ac} is determined by the number of starts and stops. It can be determined by referring to the table working condition factor $f_{Ac.}$ Note that starting and stopping should be counted once.

2) General requirements for use

If the ambient temperature is particularly high, consider increasing the temperature working condition coefficient f_{At}. It can be determined by referring to the table working condition factor $f_{At.}$

The necessary safety factor f_{As} is added if the reducer is to have a particularly high reliability.

Please contact our technical department if the value cannot be determined.

3. The determination of model (specification)

It must meet the requirements $f_B \geq f_A$

1) The motor and the reducer are directly connected or connected through a coupling.

a. Find the corresponding motor power and number of poles in the selection parameter table.

b. A model with similar transmission ratio is preliminarily selected at this power and number of poles, and its service coefficient f_B is recorded.

c.If compared,then it is the available model if the conditions are met $f_B \geq f_A$. Otherwise, enlarge the model until the conditions are met.

2) There is a front reduction connection between the motor and the reducer.

If the motor and the reducer are connected through gears, belts, sprockets and other reduction devices, the motor power must be converted to the input shaft of the reducer due to the increase of input torque, that is, the motor power must be multiplied by the transmission ratio of the front reduction device. The converted power is selected according to the method in (1) above. At this time, it is still necessary to pay attention to the unchanged number of motor poles.

4.Radial load calibration

It will produce a large radial load when the shaft head of the reducer is equipped with gears, pulleys and sprockets. At this time, a radial load calibration must be performed. Methods: See the relevant contents in the definition of selection parameters. A larger size model can be selected if the radial load exceeds the allowable value.

2.2 List of working condition coefficients

Working condition factor f_{Ah}							
Application	8h/day	16h/day	24h/day	Application	8h/day	16h/day	24h/day
Food industry				Grinding mill			
Crusher	1.75	2	2.25	Ball mill and rod mill	1.75	1.75	1.75
Beet slicer and kneading machine	1.25	1.5	1.75	Hammer mill and pulverizer	1.5	1.75	2
Meat chopper	1.25	1.5	1.5	Printing and papermaking technology			
Filling machine	0.8～1*	1	1.25	Cutting machine	1	1.25	1.5
Dough mixer	1	1.25	1.5	Reel	0.8～1*	1	1.25
Extruder	1.25	1.5	1.75	Packing feeder	1	1.25	1.25
Sugarcane chopper	1.75	1.75	1.75	Elevator			
Sugar manufacturing machine	1.75	1.75	1.75	Hoist	1.25	1.5	1.75
Toaster	1.25	1.25	1.25	Freight elevator	1.25	1.5	1.75
Auxiliary power and servomotor				Escalator	1.25	1.25	1.5
Micro-motion device without load	0.8～1*			Textile industry			
Ordinary load	1.25	1.25	1.25	Weaving machine	1.25	1.5	1.75
Compressor				Spinning machine	0.8～1*	1	1.25
Centrifugal	1	1.25	1.5	Washing machine	1	1.25	1.5
Axial flow type	1	1.25	1.5	Conveyor			
Filter	1	1.25	1.5	Bucket conveyor	1.5	1.75	1.75
Construction industry				Balanced loading or feeding	0.8～1*	1	1.25
Cement mixer	1.25	1.5	1.75	Heavy-duty chain and screw conveyor	1.25	1.5	1.5
Cement plant	1.5	1.75	2	Vibrating conveyor	1.5	1.75	2
Stucco spray machine	0.8～1*	1	1.25	Winding engine	1.5	1.75	1.75
Generator	0.8～1*	1	1.25	Belt conveyor	1.25	1.5	1.5
Water treatment and environmental protection				Winch	1.5	1.75	1.75
Aerator	1.75	2	2	Scraper conveyor	1.25	1.25	1.5
Common ventilation device	1.5	1.5	1.5	Fan			
Carousel-type ventilation device	1.75	1.75	1.75	Centrifugal fan	0.8～1*	1	1.25
Bar-grided sieve collector	0.8～1*	1	1.25	Industrial fan	1	1.25	1.5
Screw pump	1	1.25	1.5	Cooling tower power	1.75	1.75	1.75
Sifter				Cooling tower fan	1.75	2	2
Rotary type (stone, sand)	1	1.25	1.5	Packaging machinery			
Mobile suction machine	0.8~1*	1	1.25	Cardboard stacking machinery	1.25	1.5	1.75
Agricultural machinery				Packing machine	0.8～1*	1	1.25
Fertilizer and soil leveler	0.8～1*	1		Machine tool equipment			
Harvester	0.8～1*	1		Plane creation bed, gantry creation bed, and bending mill	1.25	1.5	1.75
Hoisting machinery							
Traveling mechanism	1.5	1.75	2	Main power and feed power	1	1.25	1.5
Slewing mechanism	1.25	1.5	2	Feed and auxiliary power	0.8～1*	1	1.25
Lifting mechanism	1.25	1.5	1.75	Press	1.75	2	2
Jib crane	1.25	1.5	1.75	Bender	1.5	1.75	2
Mixer				Plate shearing machine	1.75	2	2
Uniform density	1.25	1.5	1.5	Iron and steel industry			
Uneven density	1.5	1.75	1.75	Wire drawing machine	1.25	1.5	1.75
Wood and plastics industries				Winding machine	1.25	1.75	1.75
The main power of a chainsaw	1.5	1.75	2	Roller table: no gyration			
The feed power of a chainsaw	1	1.25	1.5	Combined pulling force	1.25	1.5	1.75
Stumper	1.5	1.75	2	Independent power	1.5	1.75	2
Plywood gluing machine	0.8～1*	1	1.25	Pump			
Drilling machine	0.8～1*	1	1.25	Centrifugal fan	1	1.25	1.5
Extruder	1.25	1.5	1.75	Rotary type, gear type, impeller type, and blade type	0.8~1*	1	1.25
Mixer							
Pure liquid (uniform density)	1.25	1.5	1.5	Piston pump: single-cylinder	1.5	1.75	2
Liquid with non-uniform density	1.5	1.75	2	Multi-cylinder	1.25	1.5	1.75
Liquids and solids	1.5	1.75	2	Screw pump	1	1.25	1.5

Working condition factor f_{AC}	
Number of starts and stops/hour	
<10	1
<100	1.15
<500	1.25

Working condition factor f_{At}					
Environment	+20°C...	+20°C...	+30°C...	+40°C...	+50°C...
Temperature		+30°C...	+40°C...	+50°C...	+60°C...
f_{At}	1	1.05	1.15	1.3	1.5

Note: * = 0.8, there is no radial load effect if the running time is less than 3 hours/day.
These working condition coefficients are especially suitable for occasions where the motor is the main power. Please contact our company technical department for special application designs, such as frequent start-stop and forward and reverse rotation.

2.3 Definition of selection parameters

Selection parameter table:

P [kW]: Motor power.

n_a [r/min]: Output RPM. It is calculated by referring to the speed of the motor when it is fully loaded and the transmission ratio of the reducer, and the unit is rpm.

M_a [Nm]: The torque that can be generated on the output shaft when the motor is fully loaded. This output torque has taken into account the transmission efficiency of the reducer.

[i]: The reduction ratio of the reducer from input to output.

F_{ra} [kN]: Allowable radial load at the midpoint of the output shaft extension (when the load action point is at the shaft end, in the table Fra should be multiplied by 0.4).The product of the actual radial load F_r of the working element and the actual operating condition coefficient f_A shall not exceed this value, that is, $f_A \times F_r \leq F_{ra}$ (f_A can refer to the instructions in selection step 2).

The value of Fr for general working components can be calculated by the following equation:

$f_r = M_r \times f_r/r$ (N)

Wherein:M_r Working torque of working element (Nm)

r-Pitch radius of working element(m)

f_r-Radial load factor (please refer to the following values)

Single-row sprocket	f_r=1	V-belt	f_r=1.5
One gear or double-row sprocket	f_r=1.25	Flat-belt	f_r=2.5

f_B: Coefficient of use, the ratio of the rated power of the reducer to the rated power of the motor used. It is the strength basis for choosing reducer specifications.

Machine model: that is, the model and specification number of the reducer (see the list of reducer models for details). Its structural dimensions can be found in the corresponding external installation dimension chart.

Number of poles: Number of motor poles, the reducer can be equipped with four-pole or more motors.

2.4 Radial force check and verification

When the actual action point is not in the middle of the output shaft extension, the following formula is needed to calculate the allowable radial force value in the selection table.

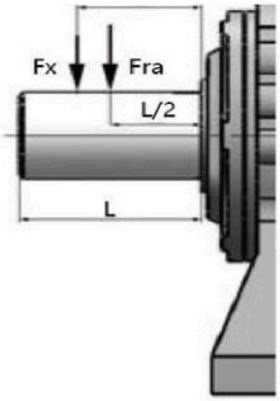

When $0 \leq X < L/2$, $F_x = [1.25-(X/2L)] \times F_{ra}$ [N]
When $X = L/2$, $F_x = F_{ra}$ [N]
When $L/2 < X \leq L$, $F_x = [1.6 - (1.2\ X/L)] \times F_{ra}$ [N]

F_{ra} -The allowable load given in the selection table (acting at X=L/2) .

F_x is the allowable radial load at the actual point of application.
X - Distance from shoulder to actual action point of load in sample
L - Extension of output shaft (length given in this sample, refer to the overall installation dimensions chart)

The product of the actual radial load F_r of the working element and the actual operating condition coefficient f_A shall not exceed the allowable radial load Fx at the actual operating point, i.e. $f_A \times F_r \leq F_x$

2.5 Notes on selection parameter table

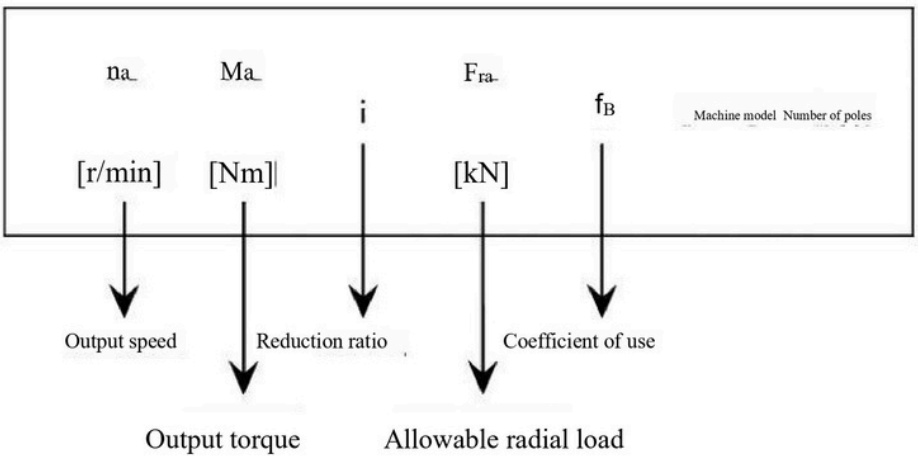

2.6 Selection parameter table

Na [r/min]	Ma [Nm]	i	Fra [kN]	f_B	Machine model	Number of poles
0.18kW			Frequency	Hz	50	
			Number of poles	P	4	6
			Rotational speed n	r/min	1315	850
0.26	600	5133	8.0	0	B20 X42	4P
0.31	600	4189	8.0	0		
0.38	600	3481	8.0	0		
0.43	600	3053	8.0	0		
0.52	600	2537	8.0	0		
0.64	600	2065	8.0	0		
0.71	600	1849	8.0	0		
0.81	600	1633	8.0	0		
0.87	600	1505	8.0	0		
0.97	600	1357	8.0	0		
1.1	600	1225	8.0	0		
1.3	500	1003	8.0	0		
1.6	500	841	8.0	0		
1.8	500	731	8.0	0		
2.0	600	649	8.0	0		
2.2	583	595	8.0	1.00		
2.7	483	493	8.0	1.20		
3.4	383	391	8.0	1.55		
4.1	313	319	8.0	1.90		
4.6	283	289	8.0	2.10		
5.2	248	253	8.0	2.40		
7.0	183	187	8.0	3.25		
8.0	162	165	8.0	3.65		
9.2	140	143	8.0	3.75		
10.9	119	121	8.0	3.75		
0.31	240	4189	5.2	0	B10 X32	4P
0.38	240	3481	5.2	0		
0.43	240	3053	5.2	0		
0.52	240	2537	5.2	0		
0.64	240	2065	5.2	0		
0.71	240	1849	5.2	0		
0.81	240	1633	5.2	0		
0.87	240	1505	5.2	0		
1.0	240	135	5.2	0		
1.1	240	1225	5.2	0		
1.3	240	1003	5.2	0		
1.6	240	841	5.2	0		
1.8	240	731	5.2	0		
2.0	240	649	5.2	0		
2.2	240	595	5.2	0		
2.7	240	493	5.2	0		
3.4	240	391	5.2	0		
4.1	240	319	5.2	0		
4.6	240	289	5.2	0		
5.2	240	253	5.2	0		
7.0	183	187	5.2	1.30		
8.0	162	165	5.2	1.45		
9.2	140	43	5.2	1.70		
10.9	119	121	5.2	1.95		
13.3	97	99	5.2	2.40		
22.3	69	59	3.0	1.85	B0 X2	4P
30.6	51	43	3.0	2.75		
37.6	41	35	2.9	2.75		
45.3	34	29	2.9	4.10		
57.2	27	23	2.4	4.10		

Na [r/min]	Ma [Nm]	i	Fra [kN]	f_B	Machine model	Number of poles
0.18kW			Frequency	Hz	50	
			Number of poles	P	4	6
			Rotational speed n	r/min	1315	850
30.6	51	43	1.2	1.35	B09 X1	4P
37.6	41	35	1.2	1.85		
45.3	34	29	1.2	1.85		
57.2	27	23	1.0	1.85		
77.4	20	17	1.0	2.75		
87.7	18	15	1.0	2.75		
101.2	15	13	0.8	2.75		
119.5	13	11	0.8	2.75		
0.25kW			Frequency	Hz	50	
			Number of poles	P	4	6
			Rotational speed n	r/min	1340	855
0.22	2500	6177	15.7	0	B41 X63	4P
0.26	2500	5133	15.7	0		
0.32	2500	4189	15.7	0		
0.38	2500	3481	15.7	0		
0.44	2500	3053	15	0		
0.53	2500	2537	15.7	0		
0.65	2500	2065	15.7	0		
0.72	2489	1849	15.7	1.00		
0.82	2199	1633	15.7	1.10		
0.89	2026	1505	15.7	1.20		
1.0	1813	135	15.7	1.35		
1.1	1637	1225	15.7	1.50		
1.3	1340	1003	15.7	1.85		
1.6	1124	841	15.7	2.20		
1.8	977	731	15.7	2.50		
2.1	867	649	15.7	2.85		
2.3	795	595	15.7	3.10		
2.7	659	493	15.7	3.75		
0.22	1250	6177	11.6	0	B31 X53	4P
0.26	1250	5133	11.6	0		
0.32	1250	4189	11.6	0		
0.38	1250	3481	11.6	0		
0.44	1250	3053	11.6	0		
0.53	1250	2537	11.6	0		
0.65	1250	2065	11.6	0		
0.72	1250	1849	11.6	0		
0.82	1250	633	11.6	0		
0.89	1250	1505	11.6	0		
1.0	1250	1357	11.6	0		
1.1	1250	1225	11.6	0		
1.3	1250	1003	11.6	0		
1.6	1124	841	11.6	1.10		
1.8	977	731	11.6	1.25		
2.1	867	649	11.6	1.40		
2.3	795	595	11.6	1.55		
2.7	659	493	11.6	1.85		
3.4	522	391	11.6	2.35		
4.2	426	319	11.6	2.90		
4.6	386	289	11.6	3.20		
5.3	338	253	11.6	3.65		
0.26	600	5133	8.0	0	B20 X42	4P
0.32	600	4189	8.0	0		
0.38	600	3481	8.0	0		
0.44	600	3053	8.0	0		

Notes:

1. Models with * cannot be equipped with direct-connected motors;
2. Models with "O" in the f_B column cannot use motors with 100% power. Please keep the load torque below "Ma" in the table during operation. Please install your own security device to protect the host;
3. All models can be configured with 6P and 8P motors corresponding to the same motor base number;
4. The allowable output torque and allowable radial force values of the three-stage transmission refer to the maximum values in the two-stage transmission.

Selection parameter table

Na [r/min]	Ma [Nm]	i	Fra [kN]	f_B	Machine model	Number of poles
0.25kW			Frequency	Hz	50	
			Number of poles	P	4	6
			Rotational speed n	r/min	1340	855
0.53	600	2537	8.0	0	B20 X42	4P
0.65	600	2065	8.0	0		
0.72	600	1849	8.0	0		
0.82	600	1633	8.0	0		
0.89	600	1505	8.0	0		
1.0	600	1357	8.0	0		
1.1	600		8.0	0		
1.3	600	1003	8.0	0		
1.6	600	841	8.0	0		
1.8	600	731	8.0	0		
2.1	600	649	8.0	0		
2.3	600	595	8.0	0		
2.7	600	493	8.0	0		
3.4	522	391	8.0	1.10		
4.2	426	319	8.0	1.35		
4.6	386	289	8.0	1.50		
5.3	338	253	8.0	1.75		
7.2	250	187	8.0	2.35		
8.1	220	165	8.0	2.70		
9.4	191	143	8.0	3.10		
11.1	162	121	8.0	3.65		
0.32	240	4189	5.2	0	B10 X32	4P
0.38	240	3481	5.2	0		
0.44	240	3053	5.2	0		
0.53	240	2537	5.2	0		
0.05	240	2065	5.2	0		
0.72	240	1849	5.2	0		
0.82	240	1633	5.2	0		
0.89	240	1505	5.2	0		
1.0	240	135	5.2	0		
1.1	240	1225	5.2	0		
1.3	240	1003	5.2	0		
1.6	240	841	5.2	0		
1.8	240	731	5.2	0		
2.1	240	649	5.2	0		
2.3	240	595	5.2	0		
2.7	240	493	5.2	0		
3.4	240	391	5.2	0		
4.2	240	319	5.2	0		
4.6	240	289	5.2	0		
5.3	240	253	5.2	0		
7.2	240	187	5.2	0		
8.1	220	165	5.2	1.05		
9.4	191	143	5.2	1.20		
11.1	162	121	5.2	1.45		
13.5	132	99	5.2	1.80		
18.9	114	71	5.2	2.05	B1 X3	4P
22.7	95	59	4.8	2.50		
28.5	75	47	4.4	3.15		
31.2	69	43	4.3	3.45		
22.7	95	59	3.0	1.35	B0 X2	4P
31.2	69	43	3.0	2.00		
38.3	56	35	2.9	2.00		
46.2	47	29	2.9	2.95		
58.3	37	23	2.4	2.95		

Na [r/min]	Ma [Nm]	i	Fra [kN]	f_B	Machine model	Number of poles
0.25kW			Frequency	Hz	50	
			Number of poles	P	4	6
			Rotational speed n	r/min	1340	855
31.2	69	43	1.2	0.95	B09 X1	4P
38.3	56	35	1.2	1.35		
46.2	47	29	1.2	1.35		
58.3	37	23	1.0	1.35		
78.8	27	17	1.0	1.95		
89.3	24	15	1.0	1.95		
103.1	21	13	0.8	1.95		
121.8	18	11	0.8	1.95		
148.9	14	9	0.8	2.60		
0.37kW			Frequency	Hz	50	
			Number of poles	P	4	6
			Rotational speed n	r/min	1340	885
0.22	2500	6177	15.7	0	B41 X63	4P
0.26	2500	5133	15.7	0		
0.32	2500	4189	15.7	0		
0.38	2500	3481	15.7	0		
0.44	2500	3053	15.7	0		
052	2500	2537	15.7	0		
0.65	2500	2065	15.7	0		
0.72	2500	1849	15.7	0		
0.82	2500	1633	15.7	0		
0.89	2500	1505	15.7	0		
0.99	2500	1357	15.7	0		
1.1	2500	1225	15.7	0		
1.3	1984	1003	15.7	1.00		
1.6	1663	841	15.7	1.20		
1.8	1446	731	15.7	1.40		
2.1	1284	649	15.7	1.60		
2.3	1177	595	15.7	1.75		
2.7	975	493	15.7	2.10		
3.4	773	391	15.7	2.65		
4.2	631	319	15.7	3.25		
4.6	572	289	15.7	3.60		
0.22	1250	6177	11.6	0	B31 X53	4P
0.26	1250	5133	11.6	0		
0.32	1250	4189	11 6	0		
0.38	1250	3481	11.6	0		
0.44	1250	3053	11.6	0		
0.53	1250	2537	11.6	0		
0.65	1250	2065	11.6	0		
0.72	1250	1849	11.6	0		
0.82	1250	1633	11.6	0		
0.89	1250	1505	11.6	0		
1.0	1250	135	11.6	0		
1.1	1250	1225	11.6	0		
1.3	1250	1003	11.6	0		
1.6	1250	841	11.6	0		
1.8	1250	731	11.6	0		
2.1	1250	649	11.6	0		
2.3	1177	595	11.6	1.05		
2.7	975	493	116	1.25		
3.4	773	391	11.6	1.60		
4.2	631	319	11.6	1.95		
4.6	572	289	11.6	2.15		
5.3	500	253	11.6	2.45		

Notes:

1. Models with * cannot be equipped with direct-connected motors;

2.Models with "O" in the f_B column cannot use motors with 100% power. Please keep the load torque below "Ma" in the table during operation. Please install your own security device to protect the host;

3. All models can be configured with 6P and 8P motors corresponding to the same motor base number;

4. The allowable output torque and allowable radial force values of the three-stage transmission refer to the maximum values in the two-stage transmission.

Selection parameter table

Na [r/min]	Ma [Nm]	i	Fra [kN]	f_B	Machine model	Number of poles
0.37kW			Frequency	Hz	50	
			Number of poles	P	4	6
			Rotational speed n	r/min	1340	885
7.2	370	187	11.6	3.35	B31 X53	4P
8.1	32b	165	11.6	3.60		
2.1	600	649	8.0	0	B20 X42	4P
2.3	600	595	8.0	0		
2.7	600	493	8.0	0		
3.4	500	391	8.0	0		
4.2	500	319	8.0	0		
4.6	572	289	8.0	1.00		
5.3	500	253	8.0	1.15		
7.2	370	187	8.0	1.60		
8.1	326	165	8.0	1.80		
9.4	283	143	8.0	2.10		
11.1	239	121	8.0	2.45		
13.5	196	99	8.0	2.70		
5.3	240	253	5.2	0	B10 X32	4P
7.2	240	187	5.2	0		
8.1	240	165	5.2	0		
9.4	240	143	5.2	0		
11.1	240	121	5.2	0		
13.5	196	99	5.2	1.20		
18.9	169	/1	5.2	1.40	B1 X3	4P
22.7	140	59	4.8	1.70		
28.5	112	47	4.4	2.10		
31.2	102	43	4.3	2.30		
38.3	83	35	3.8	2.85		
46.2	69	29	3.2	3.45		
22.7	140	59	3.0	0.90	B0 X2	4P
31.2	102	43	3.0	1.35		
38.3	83	35	2.9	1.35		
46.2	69	29	2.9	2.00		
58.3	55	23	24	2.00		
78.8	40	17	2.3	2.70		
89.3	36	15	2.2	2.70		
103.1	31	13	2.0	2.70		
121.8	26	11	1.9	2.70		
148.9	21	9	1.9	2.70		
191.4	17		1.5	2.70		
38.3	83	35	1.2	0.90	B09 X1	4P
46.2	69	29	1.2	0.90		
58.3	55	23	1.0	0.90		
78.8	40	17	1.0	1.35		
89.3	36	15	1.0	1.35		
103.1	31	13	0.8	1.35		
121.8	26	11	0.8	1.35		
148.9	21	9	0.8	2.00		
0.55kW			Frequency	Hz	50	
			Number of poles	P	4	6
			Rotational speed n	r/min	1390	885
0.18	5000	7569	33.1	0	B52 X84	4P
0.23	5000	6177	33.1	0		
0.27	5000	5133	33.1	0		
0.33	5000	4189	33.1	0		
0.40	5000	348	33.1	0		
0.46	5000	3053	33.1	0		
0.55	5000	2537	33.1	0		

Na [r/min]	Ma [Nm]	i	Fra [kN]	f_B	Machine model	Number of poles
0.55kW			Frequency	Hz	50	
			Number of poles	P	4	6
			Rotational speed n	r/min	1390	885
0.67	5000	2065	33.1	0	B52 X84	4P
0.75	5000	1849	33.1	0		
0.85	4628	1633	33.1	1.05		
0.92	4265	1505	33.1	1.15		
1.0	3846	1357	33.1	1.30		
1.1	3472	1225	33.1	1.40		
1.4	2843	1003	33.1	1.75		
1.7	2383	841	33.1	2.05		
1.9	2072	/31	33.1	2.40		
2.1	1830	649	33.1	2.70		
2.3	1686	595	33.1	2.95		
2.8	1397	493	33.1	3.55		
0.18	2500	7569	15.7	0	B42/X64/X74	4P
0.75	2500	1849	15.7	0	B41 X63	4P
0.85	2500	1633	15.7	0		
0.92	2500	150c	15.7	0		
1.0	2500	1357	15.7	0		
1.1	2500	1225	15.7	0		
1.4	2500	1003	15.7	0		
1.7	2383	841	15.7	1.00		
1.9	2072	731	15.7	1.20		
2.1	1839	649	15.7	1.35		
2.3	1686	595	15.7	1.45		
2.8	1397	493	15.7	1.75		
3.6	1108	391	15.7	2.25		
4.4	904	319	15.7	2.75		
4.8	819	289	15.7	3.05		
5.5	717	253	15.7	3.45		
1.4	1250	1003	11.6	0	B31 X53	4P
1.7	1250	841	11.6	0		
1.9	1250	731	11.6	0		
2.1	1250	649	11.6	0		
2.3	1250	595	16	0		
2.8	1250	493	11.6	0		
3.6	1108	391	11.6	1.10		
4.4	904	319	11.6	1.35		
4.8	819	289	11.6	1.50		
5.5	717	253	11.6	1.70		
7.4	530	187	11.6	2.35		
8.4	468	165	11.6	2.65		
9.7	405	143	11.6	3.05		
11.5	343	121	11.6	3.60		
3.6	600	391	8.0	0	B20 X42	4P
4.4	600	319	8.0	0		
4.8	600	289	8.0	0		
5.5	600	253	8.0	0		
7.4	530	187	8.0	1.10		
8.4	468	165	8.0	1.25		
9.7	405	143	8.0	1.45		
11.5	343	121	8.0	1.70		
14.0	281	99	8.0	1.80		
8.4	240	165	5.2	0	B10 X32	4P
9.7	240	143	5.2	0		
11.5	240	121	5.2	0		
14.0	240	99	5.2	0		

Notes:

1. Models with * cannot be equipped with direct-connected motors;
2. Models with "O" in the f_B column cannot use motors with 100% power. Please keep the load torque below "Ma" in the table during operation. Please install your own security device to protect the host;
3. All models can be configured with 6P and 8P motors corresponding to the same motor base number;
4. The allowable output torque and allowable radial force values of the three-stage transmission refer to the maximum values in the two-stage transmission.

Selection parameter table

Na [r/min]	Ma [Nm]	i	Fra [kN]	f_B	Machine model	Number of poles
0.55kW			Frequency	Hz	50	
			Number of poles	P	4	6
			Rotational speed n	r/min	1390	885
16.0	247	87	11.6	3.65	B3* X5*	4P
19.6	201	71	11.6	3.65		
16.0	296	87	8.0	1.80	B2 X4	4P
19.6	241	71	8.0	1.80		
23	201	59	7.4	2.70		
29.6	160	47	6.8	3.65		
32.3	146	43	6.7	3.65		
39.7	119	35	6.0	3.65		
19.6	241	/1	5.2	0.90	B1 X3	4P
23.6	201	59	4.8	1.25		
29.6	160	47	4.4	1.50		
32.3	146	43	4.3	1.60		
39.7	119	35	3.8	2.00		
47.9	99	29	3.8	2.40		
60.4	78	23	3.2	3.05		
81.8	58	17	3.0	3.65		
92.7	51	15	2.9	3.65		
106.9	44	13	2.8	3.65		
32.3	146	43	3.0	0.90	B0 X2	4P
39.7	119	35	2.9	0.90		
47.9	99	29	2.9	1.35		
60.4	78	23	2.4	1.35		
81.8	58	17	2.3	1.80		
92.7	51	15	2.2	1.80		
106.9	44	13	2.0	1.80		
126.4	37	11	1.9	1.80		
154.4	31	9	1.9	1.80		
198.6	24	7	1.8	1.80		
81.8	58	17	1.0	0.90	B09 X1	4P
92.7	51	15	1.0	0.90		
106.9	44	13	0.8	0.90		
126.4	37	11	0.8	0.90		
154.4	31	9	0.8	1.20		
0.75kW			Frequency	Hz	50	
			Number of poles	P	4	6
			Rotational speed n	r/min	1385	910
0.18	8800	7569	52.9	0	B63* X95*	4P
0.22	8800	6177	52.9	0		
0.27	8800	5133	52.9	0		
0.33	8800	4189	52.9	0		
0.40	8800	3481	52.9	0		
0.45	8800	3053	52.9	0		
0.55	8800	2537	52.9	0		
0.67	8009	2065	52.9	1.10		
0.75	7172	1849	52.9	1.20		
0.85	6334	1633	52.9	1.35		
0.92	5837	1505	52.9	1.50		
1.0	5263	1357	52.9	1.65		
1.1	4751	1225	52.9	1.85		
.4	3890	1003	52.9	2.25		
1.6	3262	841	52.9	2.70		
1.9	2835	731	52.9	3.10		
0.18	5000	7569	33.1	0	B52 X84	4P
0.22	5000	617	33.1	0		
0.27	5000	5133	33.1	0		

Na [r/min]	Ma [Nm]	i	Fra [kN]	f_B	Machine model	Number of poles
0.75kW			Frequency	Hz	50	
			Number of poles	P	4	6
			Rotational speed n	r/min	1385	910
0.33	5000	4189	33.1	0	B52 X84	4P
0.40	5000	3481	33.1	0		
0.45	5000	3053	33.1	0		
0.55	5000	2537	33.1	0		
0.67	5000	2065	33.1	0		
0.75	5000	1849	33.1	0		
0.85	5000	1633	33.1	0		
0.92	5000	1505	33.1	0		
1.0	5000	1357	33.1	0		
1.1	4751	1225	33.1	1.05		
1.4	3890	1003	33.1	1.25		
1.6	3262	841	33.1	1.50		
1.9	2835	731	33.1	1.75		
2.1	2517	649	33.1	1.95		
2.3	2308	595	33.1	2.15		
2.8	1912	493	33.1	2.60		
3.5	1517	391	33.1	3.30		
1.0	2500	1357	15.7	0	B41 X63	4P
1.1	2500	1225	15.7	0		
1.4	2500	1003	15.7	0		
1.6	2500	841	15.7	0		
1.9	2500	731	15	0		
2.1	2500	649	15.7	0		
2.3	2308	595	15.7	1.05		
2.8	1912	493	15.7	1.30		
3.5	1517	391	15.7	1.65		
4.3	1237	319	15.7	2.00		
4.8	1121	289	15.7	2.20		
5.5	981	253	15.7	2.55		
7.4	725	187	15.7	3.45		
2.1	1250	649	11.6	O	B31 X53	4P
2.3	1250	595	11.6	O		
2.8	1250	493	11.6	0		
3.5	1250	391	11.6	O		
4.3	1237	319	11.6	1.00		
4.8	1121	289	11.6	1.10		
5.5	981	253	11.6	1.25		
7.4	725	187	11.6	1.70		
8.4	640	165	11.6	1.95		
9.7	555	143	11.6	2.25		
11.4	469	121	11.6	2.65		
14.0	384	99	11.6	3.25		
4.8	600	289	8.0	0	B20 X42	4P
5.5	600	253	8.0	0		
	600	187	8.0	0		
8.4	600	165	8.0	0		
9.7	555	143	8.0	1.05		
11.4	469	121	8.0	1.25		
14.0	384	99	8.0	1.35		
11.4	240	121	8.0	0	B10 X32	4P
14.0	240	99	8.0	0		
15.9	405	87	11.6	2.70	B3* X5*	4P
19.5	330	71	11.6	2.70		
23.5	275	59	10.8	3.70		

Notes:

1. Models with * cannot be equipped with direct-connected motors;
2. Models with "O" in the f_B column cannot use motors with 100% power. Please keep the load torque below "Ma" in the table during operation. Please install your own security device to protect the host;
3. All models can be configured with 6P and 8P motors corresponding to the same motor base number;
4. The allowable output torque and allowable radial force values of the three-stage transmission refer to the maximum values in the two-stage transmission.

Selection parameter table

Na [r/min]	Ma [Nm]	i	Fra [kN]	f_B	Machine model	Number of poles
0.75kW			Frequency	Hz	50	
			Number of poles	P	4	6
			Rotational speed n	r/min	1385	910
15.9	405	87	8.0	1.35	B2 X4	4P
19.5	330	71	8.0	1.35		
23.5	275	59	7.4	1.95		
29.5	219	47	6.8	2.70		
32.2	200	43	6.7	2.70		
39.6	163	35	6.0	2.70		
47.8	135	29	6.0	3.95		
23.5	275	59	4.8	0.85	B1 X3	4P
29.5	219	47	4.4	1.10		
32.2	200	43	4.3	1.20		
39.6	163	35	3.8	1.45		
47.8	135	29	3.8	1.75		
60.2	107	23	3.2	2.25		
81.5	79	17	3.0	2.70		
92.3	70	15	2.9	2.70		
106.5	61	13	2.8	2.70		
125.9	51	11	2.6	3.95		
153.9	42	9	2.6	3.95		
197.9	33	7	2.5	3.95		
47.8	135	29	2.9	0.95	B0 X2	4P
60.2	107	23	2.4	0.95		
81.5	79	17	2.3	1.35		
92.3	70	15	2.2	1.35		
106.5	61	13	2.0	1.35		
125.9	51	11	1.9	1.35		
153.9	42	9	1.9	1.35		
197.9	33	7	1.8	1.35		
153.9	42	9	0.8	0.85	B09/X1	4P
1.1kW			Frequency	Hz	50	
			Number of poles	P	4	6
			Rotational speed n	r/min	1390	910
0.18	8800	7569	52.9	0	B63 X95	4P
0.23	8800	6177	52.9	0		
0.27	8800	5133	52.9	0		
0.33	8800	4189	52.9	0		
0.40	8800	3481	52.9	0		
0.46	8800	3053	52.9	0		
0.55	8800	2537	52.9	0		
0.67	8800	2065	52.9	0		
0.75	8R0c	1849	52.9	0		
0.85	8800	1633	52.9	0		
0.92	8531	1505	52.9	1.00		
1.0	7692	1357	52.9	1.15		
1.1	6944	1225	52.9	1.25		
1.4	5685	1003	52.9	1.55		
1.7	4767	841	52.9	1.85		
1.9	4143	731	52.9	2.10		
2.1	3679	649	52.9	2.40		
2.3	3373	595	52.9	2.60		
2.8	2794	493	52.9	3.15		
0.67	5000	2065	33.1	0	B52 X84	4P
0.75	5000	1849	33.1	0		
0.85	5000	1633	33.1	0		
0.92	5000	1505	33.1	0		
1.0	5000	1357	33.1	0		
1.1	5000	1225	33.1	0		

Na [r/min]	Ma [Nm]	i	Fra [kN]	f_B	Machine model	Number of poles
1.1kW			Frequency	Hz	50	
			Number of poles	P	4	6
			Rotational speed n	r/min	1390	910
1.4	5000	1003	33.1	O	B52 X84	4P
1.7	4767	841	33.1	1.05		
1.9	4143	731	33.1	1.20		
2.1	3679	649	33.1	1.35		
2.3	3373	595	33.1	1.45		
2.8	2794	493	33.1	1.80		
3.6	2216	391	33.1	2.25		
4.4	1808	319	33.1	2.75		
4.8	1638	289	33.1	3.05		
5.5	1434	253	33.1	3.50		
1.7	2500	841	15.7	0	B41 X63	4P
1.9	2500	731	15.7	0		
2.1	2500	649	15.7	0		
2.3	2500	595	15.7	0		
2.8	2500	493	15.7	0		
3.6	2216	391	15.7	1.10		
4.4	1808	319	15.7	1.35		
4.8	1638	289	15.7	1.50		
5.5	1434	253	15.7	1.75		
7.4	1060	187	15.7	2.35		
8.4	935	165	15.7	2.65		
9.7	811	143	15	2.70		
11.5	686	121	15.7	2.70		
14.0	561	99	15.7	2.70		
2.8	1250	493	11.6	0	B31 X53	4P
3.6	1250	391	11.6	0		
4.4	1250	319	11.6	0		
4.8	1250	289	11.6	0		
5.5	1250	253	11.6	0		
7.4	1060	187	11.6	115		
8.4	935	165	11.6	1.30		
9.7	811	143	11.6	1.55		
11.5	686	121	11.6	1.80		
14.0	561	99	11.6	2.20		
7.4	600	187	8.0	0	B20* X42*	4P
8.4	600	165	8.0	0		
9.7	600	143	8.0	0		
11.5	600	121	8.0	0		
14.0	561	99	8.0	1.05		
16.0	592	87	11.6	1.80	B3 X5	4P
19.6	483	71	11.6	1.80		
23.6	401	59	10.8	2.50		
29.6	320	47	9.8	3.65		
32.3	292	43	9.6	3.65		
16.0	592	87	8.0	0.90	B2 X4	4P
19.6	483	71	8.0	0.90		
23.6	401	59	7.4	1.35		
29.6	320	47	6.8	1.80		
32.3	292	43	6.7	1.80		
39.7	238	35	6.0	1.80		
47.9	197	29	6.0	2.70		
60.4	156	23	5.0	3.65		
81.8	116	17	4.8	3.80		
92.7	102	15	4.7	4.30		
106.9	88	13	4.6	4.90		

Notes:

1. Models with * cannot be equipped with direct-connected motors;
2. Models with "O" in the f_B column cannot use motors with 100% power. Please keep the load torque below "Ma" in the table during operation. Please install your own security device to protect the host;
3. All models can be configured with 6P and 8P motors corresponding to the same motor base number;
4. The allowable output torque and allowable radial force values of the three-stage transmission refer to the maximum values in the two-stage transmission.

Selection parameter table

Na [r/min]	Ma [Nm]	i	Fra [kN]	f_B	Machine model	Number of poles
1.1kW			Frequency	Hz	50	
			Number of poles	P	4	6
			Rotational speed n	r/min	1390	910
32.3	292	43	4.3	0.80	B1 X3	4P
39.7	238	35	3.8	1.00		
47.9	197	29	3.8	1.20		
60.4	156	23	3.2	1.50		
81.8	116	17	3.0	1.80		
92.7	102	15	2.9	1.80		
106.9	88	13	2.8	1.80		
126.4	75	11	2.6	2.70		
154.4	61	9	2.6	2.70		
198.6	48		2.5	2.70		
81.8	116	17	2.3	0.90	B0 X2	4P
92.7	102	15	2.2	0.90		
106.9	88	13	2.0	0.90		
126.4	75	11	1.9	0.90		
154.4	61	9	1.9	0.90		
198.6	48	7	1.8	0.90		
1.5kW			Frequency	Hz	50	
			Number of poles	P	4	6
			Rotational speed n	r/min	1390	920
0.55	8800	2537	52.9	0	B63 X95	4P
0.67	8800	2065	52.9	0		
0.75	8800	1849	52.9	0		
0.85	8800	1633	52.9	0		
0.92	8800	1505	52.9	0		
1.0	8800	1357	52.9	0		
1.1	8800	1225	52.9	0		
1.4	7753	1003	52.9	1.10		
1.7	6500	841	52.9	1.35		
1.9	5650	731	52.9	1.55		
2.1	5016	649	52.9	1.75		
2.3	4599	595	52.9	1.90		
2.8	3811	493	52.9	2.30		
3.6	3022	391	52.9	2.90		
1.0	5000	1357	33.1	0	B52 X84	4P
1.1	5000	1225	33.1	0		
1.4	5000	1003	33.1	0		
1.7	5000	841	33.1	0		
1.9	5000	731	33.1	O		
2.1	5016	649	33.1	1.00		
2.3	4599	595	33.1	1.05		
2.8	3811	493	33.1	1.30		
3.6	3022	391	33.1	1.65		
4.4	2466	319	33.1	2.00		
4.8	2234	289	33.1	2.25		
5.5	1956	253	33.1	2.55		
7.4	1445	187	33.1	3.45		
2.3	2500	595	15.7	0	B41 X63	4P
2.8	2500	493	15.7	0		
3.6	2500	391	15.7	0		
4.4	2466	319	15.7	1.00		
4.8	2234	289	15.7	1.10		
5.5	1956	253	15.7	1.25		
7.1	1507	195	15.7	1.65		
7.4	1445	187	15.7	1.70		
8.4	1275	165	15.7	1.95		

Na [r/min]	Ma [Nm]	i	Fra [kN]	f_B	Machine model	Number of poles
1.5kW			Frequency	Hz	50	
			Number of poles	P	4	6
			Rotational speed n	r/min	1390	920
9.7	1105	143	15.7	1.95	B41 X63	4P
11.5	935	121	15.7	1.95		
14.0	765	99	15.7	1.95		
4.4	1250	319	11.6	0	B31 X53	4P
4.8	1250	289	11.6	0		
5.5	1250	253	11.6	0		
7.4	1250	187	11.6	0		
8.4	1250	165	11.6	0		
9.7	1105	143	11.6	1.10		
11.5	935	121	116	1.30		
14.0	765	99	11.6	1.60		
16.0	807	87	11.6	1.35	B3 X5	4P
19.6	659	71	11.6	1.35		
23.6	547	59	10.8	1.85		
29.6	436	47	9.8	2.70		
32.3	399	43	9.6	2.70		
39.7	325	35	8.5	3.60		
23.6	547	59	7.4	0.95	B2 X4	4P
29.6	436	47	6.8	1.35		
32.3	399	43	6.7	1.35		
39.7	325	35	6.0	1.35		
47.9	269	29	6.0	1.95		
60.4	213	23	5.0	2.70		
81.8	158	17	4.8	3.60		
92.7	139	15	4.7	3.60		
106.9	121	13	4.6	3.60		
126.4	102	11	4.1	3.60		
154.4	83	9	4.0	3.60		
198.6	65	7	3.8	3.60		
47.9	269	29	3.8	0.85	B1 X3	4P
60.4		23	3.2	1.10		
81.8	158	17	3.0	1.35		
92.7	139	15	2.9	1.35		
106.9	121	13	2.8	1.35		
126.4	102	11	2.6	1.95		
154.4	83	9	2.6	1.95		
198.6	65	7	2.5	1.95		
2.2kW			Frequency	Hz	50	
			Number of poles	P	4	6
			Rotational speed n	r/min	1410	935
0.19	12000	7569	72.5	0	B74 X106	4P
0.23	12000	6177	72.5	0		
0.27	12000	513	725	0		
0.34	12000	4189	72.5	0		
0.41	12000	3481	72.5	0		
0.46	12000	3053	72.5	0		
0.56	12000	2537	72.5	0		
0.68	12000	2065	72.5	0		
0.76	12000	1849	72.5	0		
0.86	12000	1633	72.5	0		
0.94	12000	1505	72.5	0		
1.0	12000	1357	72.5	0		
1.2	12000	1225	72.5	0		
1.4	11209	1003	72.5	1.05		
1.7	9399	841	72.5	1.25		

Notes:

1. Models with * cannot be equipped with direct-connected motors;
2. Models with "O" in the f_B column cannot use motors with 100% power. Please keep the load torque below "Ma" in the table during operation. Please install your own security device to protect the host;
3. All models can be configured with 6P and 8P motors corresponding to the same motor base number;
4. The allowable output torque and allowable radial force values of the three-stage transmission refer to the maximum values in the two-stage transmission.

Selection parameter table

Na [r/min]	Ma [Nm]	i	Fra [kN]	f_B	Machine model	Number of poles
2.2kW			Frequency	Hz	50	
			Number of poles	P	4	6
			Rotational speed n	r/min	1410	935
1.9	8169	731	72.5	1.45	B74 X106	4P
2.2	/253	649	/2.5	1.65		
2.4	6649	595	72.5	1.80		
2.9	5510	493	72.5	2.20		
0.76	8800	1849	52.9	0	B63 X95	4P
0.86	8800	1632	52.9	0		
0.94	3800	1505	52.9	0		
1.0	8800	1357	52.9	0		
1.2	8800	1225	52.9	0		
1.4	8800	1003	52.9	0		
1.7	8800	841	52.9	0		
1.9	8169	731	52.9	1.05		
2.2	7253	649	52.9	1.20		
2.4	6649	595	52.9	1.30		
2.9	5510	493	52.9	1.60		
3.6	4370	391	52.9	2.00		
4.4	3565	319	52.9	2.50		
4.9	3230	289	52.9	2.75		
5.6	2827	253	52.9	3.15		
1.4	5000	1003	33.1	0	B52 X84	4P
1.7	5000	841	33.1	0		
1.9	5000	731	33.1	0		
2.2	5000	649	33.1	0		
2.4	5000	595	33.1	0		
2.9	5000	493	33.1	0		
3.6	4370	391	33.1	1.15		
4.4	3565	319	33.1	1.40		
4.9	3230	289	33.1	1.55		
5.6	2827	253	33.1	1.75		
7.5	2090	187	33.1	2.40		
8.5	1844	165	33.1	2.45		
9.9	1598	143	33.1	2.45		
11.7	1352	121	33.1	2.45		
14.2	1106	99	33.1	2.45		
8.5	1844	165	15.7	1.35	B42 X74 X64	4P
9.9	1598	143	15.7	1.55		
11.7	1352	121	15.7	1.85		
14.2	1106	99	15.7	2.25		
3.6	2500	391	15.7	0	B41* X63*	4P
4.4	2500	319	15.7	0		
4.9	2500	289	15.7	0		
5.6	2500	253	15.7	0		
7.5	2090	187	15.7	1.20		
8.5	1844	165	15.7	1.35		
9.9	1598	143	15.7	1.35		
11.7	1352	121	15.7	1.35		
14.2	1106	99	15.7	1.35		
7.5	1250	187	11.6	0	B31* X53*	4P
8.5	1250	165	11.6	0		
9.9	1250	143	11.6	0		
11.7	1250	121	11.6	0		
14.2	1106	99	11.6	1.15		
16.2	1167	87	15.7	1.80	B4 X6 X7	4P
19.9	952	71	15.7	1.80		
23.9	791	59	14.5	2.45		

Na [r/min]	Ma [Nm]	i	Fra [kN]	f_B	Machine model	Number of poles
2.2kW			Frequency	Hz	50	
			Number of poles	P	4	6
			Rotational speed n	r/min	1410	935
30.0	630	47	13.2	3.35	B4/X6/X7	4P
32.8	577	43	13.0	3.35		
16.2	1167	87	11.6	0.90	B3 X5	4P
19.9	952	71	11.6	0.90		
23.9	791	59	10.8	1.25		
30.0	630	47	9.8	1.80		
32.8	577	43	9.6	1.80		
40.3	469	35	8.5	2.45		
48.6	389	29	8.5	3.00		
61.3	308	23	7.3	3.35		
74.2	255	19	7.2	4.40		
30.0	630	47	6.8	0.90	B2 X4	4P
32.8	577	43	6.7	0.90		
40.3	469	35	6.0	0.90		
48.6	389	29	6.0	1.35		
61.3	308	23	5.0	1.80		
82.9	228	17	4.8	2.45		
94.0	201	15	4.7	2.45		
108.5	174	13	4.6	2.45		
128.2	148	11	4.1	2.45		
156.7	121	9	4.0	2.45		
201.4	94		3.8	2.45		
82.9	228	17	3.0	0.90	B1 X3	4P
94.0	201	15	2.9	0.90		
108.5	174	13	2.8	0.90		
128.2	148	11	2.6	1.35		
156.7	121	9	2.6	1.35		
201.4	94	7	2.5	1.35		
3kW			Frequency	Hz	50	
			Number of poles	P	4	6
			Rotational speed n	r/min	1410	965
0.19	21500	7569	91.7	0	B84 X117	4P
0.23	21500	6177	91.7	0		
0.27	21500	5133	91.7	0		
0.34	21500	4189	91.7	0		
0.41	21500	3481	91.7	0		
0.46	21500	3053	91	0		
0.56	21500	2537	91.7	0		
0.68	21500	2065	91.7	0		
0.76	21500	1840	91.7	0		
0.86	21500	1633	91.7	0		
0.94	21500	1505	91.7	0		
1.0	20680	1357	91.7	1.05		
1.2	18668	1225	91.7	1.15		
1.4	15285	1003	91.7	1.40		
1.7	12816	841	91.7	1.70		
1.9	11140	731	91.7	1.95		
2.2	9890	649	91.7	2.20		
2.4	9067	595	91.7	2.40		
2.9	7513	493	91.7	2.90		
0.19	12000	7569	72.5	0	B74 X106	4P
0.23	12000	6177	72.5	0		
0.27	12000	5133	72.5	0		
0.34	12000	4189	72.5	0		
0.41	12000	3481	72.5	0		

Notes:

1. Models with * cannot be equipped with direct-connected motors;

2.Models with "O" in the f_B column cannot use motors with 100% power. Please keep the load torque below "Ma" in the table during operation. Please install your own security device to protect the host;

3. All models can be configured with 6P and 8P motors corresponding to the same motor base number;

4. The allowable output torque and allowable radial force values of the three-stage transmission refer to the maximum values in the two-stage transmission.

Selection parameter table

Na [r/min]	Ma [Nm]	i	Fra [kN]	f_B	Machine model	Number of poles	Na [r/min]	Ma [Nm]	i	Fra [kN]	f_B	Machine model	Number of poles
3kW			Frequency	Hz	50		3kW			Frequency	Hz	50	
			Number of poles	P	4	6				Number of poles	P	4	6
			Rotational speed n	r/min	1410	965				Rotational speed n	r/min	1410	965
0.46	12000	3053	72.5	0	B74 X106	4P	16.2	1591	87	33.1	2.45	B5* X8*	4P
0.56	12000	2537	72.5	0			19.9	1298	/1	30.2	3.10		
0.68	12000	2065	72.5	0			23.9	1079	59	28.1	3.35		
0.76	12000	1849	72.5	0			16.2	1591	87	15.7	1.35	B4 X6 X7	4P
0.86	12000	1633	72.5	0			19.9	1298		15.7	1.35		
0.94	12000	1505	72.5	0			23.9	1079	59	14.5	1.80		
1.0	12000	1357	72.5	0			30.0	860	47	13.2	2.45		
1.2	12000	1225	72.5	0			32.8	786	43	13.0	2.45		
1.4	12000	1003	72.5	0			40.3	640	35	11.5	3.35		
1.7	12000	841	72.5	0			48.6	530	29	11.5	3.35		
1.9	11140	731	72.5	1.05			23.9	1079	59	10.8	0.90	B3 X5	4P
2.2	9890	649	72.5	1.20			30.0	860	47	9.8	1.35		
2.4	9067	595	72.5	1.30			32.8	/86	43	9.6	1.35		
2.9	7513	493	72.5	1.60			40.3	640	35	8.5	1.80		
3.6	5959	391	72.5	2.00			48.6	530	29	8.5	2.00		
4.4	4861	319	72.5	2.50			61.3	421	23	7.3	2.45		
4.9	4404	289	72.5	2.75			74.2	347	19	7.2	3.25		
1.2	8800	1225	52.9	0	B63 X95	4P	82.9	31	17	6.7	3.25		
1.4	8800	1003	52.9	0			94.0	274	15	6.5	3.25		
1.7	8800	841	52.9	0			108.5	238	13	6.2	3.35		
1.9	8800	731	52.9	0			128.2	201	11	5.9	3.35		
2.2	8800	649	52.9	0			156.7	165	9	5.5	3.35		
2.4	8800	595	52.9	0			48.6	530	29	6.0	095	B2 X4	4P
2.9	7513	493	52.9	1.15			61.3	421	23	5.0	1.35		
3.6	5959	391	52.9	1.45			82.9	311	17	4.8	1.80		
4.4	4861	319	52.9	1.80			94.0	274	15	4.7	1.80		
4.9	4404	289	52.9	2.00			108.5	238	13	4.6	1.80		
5.6	3856	253	52.9	2.30			128.2	201	11	4.1	1.80		
7.5	2850	187	52.9	3.10			156.7	165	9	4.0	1.80		
8.5	2514	165	52.9	3.35			201.4	128	7	3.8	1.80		
9.9	2179	143	52.9	3.35			128.2	201	11	2.6	0.95	B1* X3*	4P
11.7	1844	121	52.9	3.35			156.7	165	9	2.6	0.95		
14.2	1509	99	52.9	3.35			201.4	128	7	2.5	0.95		
8.5	2514	165	33.1	2.00	B53 X85	4P	4kW			Frequency	Hz	50	
9.9	2179	143	33.1	2.30						Number of poles	P	4	6
11.7	1844	121	33.1	2.75						Rotational speed n	r/min	1435	965
14.2	1509	99	33.1	3.35			0.19	21500	7569	91.7	0	B84 X117	4P
2.4	5000	595	33.1	0	B52 X84	4P	0.23	21500	6177	91.7	0		
2.9	5000	493	33.1	0			0.28	21500	5133	91.7	0		
3.6	5000	391	33.1	0			0.34	21500	4189	91.7	0		
4.4	4861	319	33.1	1.00			0.41	21500	3481	91.7	0		
4.9	4404	289	33.1	1.15			0.47	21500	3053	91.7	0		
5.6	3856	253	33.1	1.30			0.57	21500	2537	91.7	0		
7.5	2850	187	33.1	1.75			0.69	21500	2065	91.7	0		
8.5	2514	165	33.1	1.80			0.78	21500	1849	91.7	0		
9.9	2170	143	33.1	1.80			0.88	21500	1633	91.7	0		
11.7	1844	121	33.1	1.80			1.0	21500	1505	91.7	0		
14.2	1509	99	33.1	1.80			1.1	21500	1357	91.7	0		
4.4	2500	319	15	0	B42 X64 X74	4P	1.2	21500	1225	91.7	0		
4.9	2500	289	15.7	0			1.4	20025	1003	91.7	1.05		
5.6	2500	253	15.7	0			1.7	16791	841	91.7	1.25		
7.5	2500	187	15.7	0			2.0	14595	731	91.7	1.45		
8.5	2514	165	15.	1.00			2.2	12957	649	91.7	1.65		
9.9	2179	143	15.7	1.15			2.4	11879	595	91.7	1.80		
11.7	1844	121	15.7	1.35			2.9	9843	493	91.7	2.15		
14.2	1509	99	15.7	1.65			3.7	7806	391	91.7	2.75		

Notes:

1. Models with * cannot be equipped with direct-connected motors;
2. Models with "O" in the f_B column cannot use motors with 100% power. Please keep the load torque below "Ma" in the table during operation. Please install your own security device to protect the host;
3. All models can be configured with 6P and 8P motors corresponding to the same motor base number;
4. The allowable output torque and allowable radial force values of the three-stage transmission refer to the maximum values in the two-stage transmission

Selection parameter table

Na [r/min]	Ma [Nm]	i	Fra [kN]	f_B	Machine model	Number of poles	Na [r/min]	Ma [Nm]	i	Fra [kN]	f_B	Machine model	Number of poles
4kW			Frequency	Hz	50		4kW			Frequency	Hz	50	
			Number of poles	P	4	6				Number of poles	P	4	6
			Rotational speed n	r/min	1435	965				Rotational speed n	r/min	1435	965
4.5	6369	319	91.7	3.35	B84 X117	4P	16.5	2084	87	33.1	1.85	B5* X8*	4P
5.0	5770	289	91.7	3.70			20.2	1701	71	30.2	2.30		
5.7	5051	253	91.7	3.70			24.3	1414	59	28.1	2.50		
7.7	3733	187	91.7	3.70			30.5	1126	47	27.0	3.70		
1.1	12000	1357	725	0	B74 X106	4P	334	1030	43	26.4	3.70		
1.2	12000	1225	72.5	0			16.5	2084	87	15.7	1.00	B4 X6 X7	4P
1.4	12000	1003	72.5	0			20.2	1701	71	15.7	1.00		
1.7	12000	841	72.5	0			24.3	1414	59	14.5	1.35		
2.0	12000	731	72.5	0			30.5	1126	47	13.2	1.85		
2.2	12000	649	72.5	0			33.4	1030	43	13.0	1.85		
2.4	11879	595	72.5	1.00			41.0	839	35	11.5	2.50		
2.9	9843	493	72.5	1.20			49.5	695	29	11.5	2.50		
3.7	7806	391	72.5	1.50			62.4	551	23	9.8	3.70		
4.5	6369	319	72.5	1.85			30.5	1126	47	9.8	1.00	B3 X5	4P
5.0	5770	289	72.5	2.05			33.4	1030	43	9.6	1.00		
5.7	5051	253	72.5	2.35			41.0	839	35	8.5	1.35		
7.7	3733	187	72.5	3.20			49.5	695	29	8.5	1.65		
8.4	3294	165	72.5	3.50			62.4	551	23	7.3	1.85		
11.4	2416	121	72.5	3.70			75.5	455	19	7.2	2.40		
13.9	1977	99	72.5	3.70			84.4	407	17	6.7	2.40		
1.7	8800	841	52.9	0	B63 X95	4P	95.7	359	15	6.5	2.40		
2.0	8800	731	52.9	0			110.4	311	13	6.2	2.50		
2.2	8800	649	52.9	0			130.5	264	11	5.9	2.50		
2.4	8800	595	52.9	0			159.4	216	9	5.5	2.50		
2.9	8800	493	52.9	0			62.4	551	23	5.0	1.00	B2 X4	4P
3.7	7806	391	52.9	1.10			84.4	407	17	4.8	1.35		
4.5	6369	319	52.9	1.35			95.7	359	15	4.7	1.35		
5.0	5770	289	52.9	1.50			110.4	311	13	4.6	1.35		
5.7	5051	253	52.9	1.70			130.5	264	11	4.1	1.35		
7.7	3733	187	52.9	2.35			159.4	216	9	4.0	1.35		
8.7	3294	165	52.9	2.50			205.0	168	7	3.8	1.35		
10.0	2855	143	52.9	2.50			5.5kW			Frequency	Hz	50	
11.9	2416	121	52.9	2.50						Number of poles	P	4	6
14.5	1977	99	52.9	2.50						Rotational speed n	r/min	1445	965
7.7	3733	187	33.1	1.30	B53 X85	4P	0.19	29400	7569	158.4	0	B95 X128	4P
8.7	3294	165	33.1	1.50			0.23	29400	6177	158.4	0		
10.0	2855	143	33.1	1.75			0.28	29400	5133	158.4	0		
11.9	2416	121	33.1	2.05			0.34	29400	4189	158.4	0		
14.5	1977	99	33.1	2.50			0.42	29400	3481	158.4	0		
2.9	5000	493	33.1	0	B52 X84	4P	0.47	29400	3053	158.4	0		
3.7	5000	391	33.1	0			0.57	29400	2537	158.4	0		
4.5	5000	319	33.1	0			0.70	29400	2065	158.4	0		
5.0	5000	289	33.1	0			0.78	29400	1849	158.4	0		
5.7	5000	253	33.1	0			0.88	29400	1633	158.4	0		
7.7	3733	187	33.1	1.30			0.96	29400	1505	158.4	0		
8.7	3294	165	33.1	1.35			1.1	29400	1357	158.4	0		
10.0	2855	143	33.1	1.35			1.2	29400	1225	158.4	0		
11.9	2416	121	33.1	1.35			1.4	27344	1003	158.4	1.05		
14.5	1977	99	33.1	1.35			1.7	22927	841	158.4	1.25		
7.7	2500	187	15.7	0	B42 X64 X74	4P	2.0	19929	731	158.4	1.45		
8.7	2500	165	15.7	0			2.2	17693	649	158.4	1.65		
10.0	2500	143	15.7	0			2.4	16221	595	158.4	1.80		
119	2416	121	15.7	1.00			2.9	13440	493	158.4	2.15		
14.5	1977	99	15.7	1.25			3.7	10659	391	158.4	2.70		

Notes:

1. Models with * cannot be equipped with direct-connected motors;
2. Models with "O" in the f_B column cannot use motors with 100% power. Please keep the load torque below "Ma" in the table during operation. Please install your own security device to protect the host;
3. All models can be configured with 6P and 8P motors corresponding to the same motor base number;
4. The allowable output torque and allowable radial force values of the three-stage transmission refer to the maximum values in the two-stage transmission.

Selection parameter table

Na [r/min]	Ma [Nm]	i	Fra [kN]	f_B	Machine model	Number of poles
5.5kW			Frequency	Hz	50	
			Number of poles	p	4	6
			Rotational speed n	r/min	1445	965
0.70	21500	2065	91.7	0	B84 X117	4P
0.78	21500	1849	91.7	0		
0.88	21500	1633	91.7	0		
1.0	21500	1505	91.7	0		
1.1	21500	1357	91.7	0		
1.2	21500	1225	91.7	0		
1.4	21500	1003	91.7	0		
1.7	21500	841	91.7	0		
2.0	19929	131	91.7	1.05		
2.2	17693	649	91.7	1.20		
2.4	16221	595	91.7	1.30		
2.9	13440	493	91.7	1.55		
3.7	10659	391	91.7	2.00		
4.5	8697	319	91.7	2.45		
5.0	7879	289	91.7	2.70		
5.7	6897	253	91.7	2.70		
7.7	5098	187	91.7	2.70		
1.4	12000	1003	72.5	0	B74 X106	4P
1.7	12000	841	72.5	0		
2.0	12000	731	72.5	0		
2.2	12000	649	72.5	0		
2.4	12000	595	72.5	0		
2.9	12000	493	72.5	0		
3.7	10659	391	72.5	1.10		
4.5	8697	319	72.5	1.35		
5.0	7879	289	72.5	1.50		
5.7	6897	253	72.5	1.70		
7.7	5098	187	72.5	2.30		
8.4	440g	165	72.5	2.55		
11.4	320c	121	72.5	2.70		
13.9	2699	99	72.5	2.70		
8.8	4400	165	52.9	1.95	B64 X96	4P
10.1	3800	143	52.9	2.20		
11.9	3299	121	52.9	2.65		
14.6	2699	99	52.9	2.70		
2.4	8800	595	52.9	0	B63 X95	4P
2.9	8800	493	52.9	0		
3.7	8800	391	52.9	0		
4.5	8697	319	52.9	1.00		
5.0	7879	289	52.9	1.10		
5.7	6897	253	52.9	1.25		
7.7	5098	187	52.9	1.70		
8.8	4498	165	52.9	1.80		
10.1	3898	143	52.9	1.80		
11.9	3299	121	52.9	1.80		
14.6	2699	99	52.9	1.80		
4.5	5000	319	33.1	0	B53 X85	4P
5.0	5000	289	33.1	0		
5.7	5000	253	33.1	0		
7.7	5000	187	33.1	0		
8.8	4498	165	33.1	1.10		
10.1	3898	143	33.1	1.25		
11.9	3299	121	33.1	1.50		
14.6	2699	99	33.1	1.80		

Na [r/min]	Ma [Nm]	i	Fra [kN]	f_B	Machine model	Number of poles
5.5kW			Frequency	Hz	50	
			Number of poles	p	4	6
			Rotational speed n	r/min	1445	965
11.1	4262	87	52.9	1.75	B6* X9*	6P
13.6	3478	71	52.9	1.75		
16.4	2890	59	49.6	1.80		
20.5	2302	47	49.6	2.70		
224	2106	43	49.6	2.70		
16.6	2846	87	33.1	1.35	B5 X8	4P
20.4	2323	71	30.2	1.70		
24.5	1930	59	28.1	1.80		
30.7	1538	47	27.0	2.70		
33.6	1401	43	26.4	2.70		
41.3	1145	35	26.4	3.40		
49.8	949	29	25.2	3.65		
24.5	1930	59	14.5	0.95	B4 X6 X7	4P
30.7	1538	47	13.2	1.35		
33.6	1407	43	13.0	1.35		
41.3	1145	35	11.5	1.80		
49.8	949	29	11.5	1.80		
62.8	752	23	9.8	2.70		
76.1	622	19	9.4	2.70		
85.0	556	17	9.1	2.70		
96.3	491	15	8.8	2.70		
111.2	425	13	8.4	2.70		
131.4	360	11	8.0	2.70		
160.6	294	9	6.6	2.70		
41.3	1145	35	8.5	0.95	B3 X5	4P
49.8	949	29	8.5	1.20		
62.8	752	23	7.3	1.35		
76.1	622	19	7.2	1.75		
85.0	556	17	6.7	1.75		
96.3	491	15	6.5	1.75		
111.2	425	13	6.2	1.80		
131.4	360	11	5.9	1.80		
160.6	294	9	5.5	1.80		
85.0	556	17	4.8	0.95	B2* X4*	4P
96.3	491	15	4.7	0.95		
111.2	425	13	4.6	0.95		
131.4	360	11	4.1	0.95		
160.6	294	9	4.0	0.95		
206.4	229	7	3.8	0.95		
			Frequency		50	
			Number of poles	P	4	6
			Rotational speed n	r/min	1445	970
010	29400	7569	158.4	0	B95 X128	4P
0.23	29400	6177	158.4	0		
0.28	29400	5133	158.4	0		
0.34	29400	4189	158.4	0		
0.42	29400	3481	158.4	0		
0.47	29400	3053	158.4	0		
0.57	29400	2537	158.4	0		
0.70	29400	2065	158.4	0		
0.78	29400	1849	158.4	0		
0.88	29400	1633	158.4	0		
0.96	29400	1505	158.4	0		
1.1	29400	1357	158.4	0		

Notes:

1. Models with * cannot be equipped with direct-connected motors;
2. Models with "O" in the f_B column cannot use motors with 100% power. Please keep the load torque below "Ma" in the table during operation. Please install your own security device to protect the host;
3. All models can be configured with 6P and 8P motors corresponding to the same motor base number;
4. The allowable output torque and allowable radial force values of the three-stage transmission refer to the maximum values in the two-stage transmission.

Selection parameter table

Na [r/min]	Ma [Nm]	i	Fra [kN]	f_B	Machine model	Number of poles	Na [r/min]	Ma [Nm]	i	Fra [kN]	f_B	Machine model	Number of poles
7.5kW			Frequency	Hz	50		7.5kW			Frequency	Hz	50	
			Number of poles	P	4	6				Number of poles	P	4	6
			Rotational speed n	r/min	1445	970				Rotational speed n	r/min	1445	970
1.2	29400	1225	158.4	0	B95 X128	4P	5.7	5000	253	33.1	0	B53 X85	4P
1.4	29400	1003	158.4	0			7.7	5000	187	33.1	0		
1.7	29400	841	158.4	0			8.8	5000	165	33.1	0		
2.0	27175	731	158.4	1.05			10.1	5000	143	33.1	0		
2.2	24127	649	158.4	1.20			11.9	4498	121	33.1	1.10		
2.4	22119	595	158.4	1.30			14.6	3680	99	33.1	1.35		
2.9	18328	493	158.4	1.55			11.1	5782	87	72.5	1.65	B7* X10*	6P
3.7	14536	391	158.4	2.00			13.7	4718	71	72.5	2.30		
4.5	11859	319	158.4	2.45			16.4	3921	59	66.5	2.80		
5.7	9405	253	91.7	2.25	B85 X118	4P	20.6	3123	47	63.4	3.20		
7.7	6952	187	91.7	3.05			22.6	2858	43	62.2	3.80		
1.1	21500	1357	91.7	0	B84 X117	4P	27.7	2326	35	58.9	3.80		
1.2	21500	1225	91.7	0			11.1	5782	87	52.9	1.30	B6* X9*	6P
1.4	21500	1003	91.7	0			13.7	4718	71	52.9	1.30		
1.7	21500	841	91.7	0			16.4	3921	59	49.6	1.35		
2.0	21500	731	91.7	0			20.6	3123	47	49.6	1.95		
2.2	21500	649	91.7	0			22.6	2858	43	49.6	1.95		
2.4	21500	595	91.7	0			27.7	2326	35	46.9	2.70		
2.9	18328	493	91.7	1.15			33.4	1927	29	44.8	3.20		
3.7	14536	391	91.7	1.45			16.6	3881	87	33.1	0.95	B5 X8	4P
4.5	11859	319	91.7	1.80			20.4	3167	71	30.2	1.25		
5.0	10744	289	91.7	1.95			24.5	2632	59	28.1	1.35		
5.7	9405	253	91.7	1.95			30.7	2097	47	27.0	1.95		
7.7	6952	187	91.7	1.95			33.6	1918	43	26.4	1.95		
11.4	4498	121	91.7	1.95			41.3	1561	35	26.4	2.50		
13.9	3680	99	91.7	1.95			49.8	1294	29	25.2	2.70		
2.2	12000	649	72.5	0	B74 X106	4P	62.8	1026	23	22.2	3.30		
2.4	12000	595	72.5	0			76.1	848	19	21.6	3.30		
2.9	12000	493	72.5	0			85.0	758	17	20.9	3.30		
3.7	12000	391	72.5	0			96.3	669	15	19.2	3.30		
4.5	11859	319	72.5	1.00			111.2	580	13	16.8	3.30		
5.0	10744	289	72.5	1.10			131.4	491	11	15.4	3.30		
5.7	9405	253	72.5	1.25			30.7	2097	47	132	0.95	B4 X6 X7	4P
7.7	6952	187	72.5	1.70			33.6	1918	43	13.0	0.95		
8.4	6134	165	72.5	1.85			41.3	1561	35	11.5	1.35		
11.4	4498	121	72.5	1.95			49.8	1294	29	11.5	1.35		
13.9	3680	99	72.5	1.95			62.8	1026	23	9.8	1.95		
8.8	6134	165	52.9	1.40	B64 X96	4P	76.1	848	19	9.4	1.95		
10.1	5316	143	52.9	1.65			85.0	758	17	9.1	1.95		
11.9	4498	121	52.9	1.95			96.3	669	15	8.8	1.95		
14.6	3680	99	52.9	1.95			111.2	580	13	8.4	1.95		
3.7	8800	391	52.9	0	B63 X95	4P	131.4	491	11	8.0	1.95		
4.5	8800	319	52.9	0			160.6	401	9	6.6	1.95		
5.0	8800	289	52.9	0			49.8	1294	29	8.5	0.85	B3 X5	4P
5.7	8800	253	52.9	0			62.8	1026	23	7.3	0.95		
7.7	6952	187	52.9	1.25			76.1	848	19	7.2	1.30		
8.8	6134	165	52.9	1.35			85.0	758	17	6.7	1.30		
10.1	5316	143	52.9	1.35			96.3	669	15	6.5	1.30		
11.9	4498	121	52.9	1.35			111.2	580	13	6.2	1.35		
14.6	3680	99	52.9	1.35			131.4	491	11	5.9	1.35		
							160.6	401	9	5.5	1.35		

Notes:

1. Models with * cannot be equipped with direct-connected motors;
2. Models with "O" in the f_B column cannot use motors with 100% power. Please keep the load torque below "Ma" in the table during operation. Please install your own security device to protect the host;
3. All models can be configured with 6P and 8P motors corresponding to the same motor base number;
4. The allowable output torque and allowable radial force values of the three-stage transmission refer to the maximum values in the two-stage transmission.

Selection parameter table

Na [r/min]	Ma [Nm]	i	Fra [kN]	f_B	Machine model	Number of poles
11kW			Frequency	Hz	50	
			Number of poles	P	4	6
			Rotational speed n	r/min	1460	970
1.0	29400	1505	158.4	0	B95 X128	4P
1.1	29400	1357	158.4	0		
1.2	29400	1225	158.4	0		
1.5	29400	1003	158.4	0		
1.7	29400	841	158.4	0		
2.0	2940	731	158.4	0		
2.2	29400	649	158.4	0		
2.5	29400	595	158.4	0		
3.0	26604	493	158	1.10		
3.7	21100	391	158.4	1.35		
4.6	17215	319	158.4	1.70		
5.8	13653	253	158.4	2.15		
5.1	15596	289	91.7	1.35	B85 X118	4P
5.8	13653	253	91.7	1.55		
7.8	10091	187	91.7	2.10		
11.5	6826	121	91.7	2.25		
1.7	21500	841	91.7	0	B84 X117	4P
2.0	21500	731	91.7	0		
2.2	21500	649	91.7	0		
2.5	21500	595	91	0		
3.0	21500	493	91.7	0		
3.7	21100	391	91.7	1.00		
4.6	17215	319	91.7	1.20		
5.1	15596	289	91.7	1.35		
5.8	13653	253	91.7	1.35		
7.8	10091	187	91.7	1.35		
11.5	6826	121	91.7	1.35		
14.1	5585	99	91.7	1.35		
3.7	12000	391	72.5	0	B74 X106	4P
4.6	12000	319	72.5	0		
5.1	12000	289	72.5	0		
5.8	12000	253	72.5	0		
7.8	10091	187	72.5	1.15		
8.6	9201	165	72.5	1.30		
11.5	6826	121	72.5	1.35		
14.1	5585	99	72.5	1.35		
4.6	8800	319	52.9	0	B64 X96	4P
5.1	8800	289	52.9	0		
5.8	8800	253	52.9	0		
7.8	8800	187	52.9	0		
8.8	8800	165	52.9	0		
10.2	7717	143	52.9	1.10		
12.1	6530	121	52.9	1.30		
14.7	5342	99	52.9	1.35		
11.1	8480	87	72.5	1.15	B7* X10*	6P
13.7	6920	71	72.5	1.55		
16.4	5751	59	66.5	1.90		
20.6	4581	47	63.4	2.25		
22.6	4191	43	62.2	2.60		
27.7	3411	35	58.9	2.60		
11.1	8480	87	52.9	0.85	B6* X9*	6P
13.7	6920	71	52.9	0.85		
16.4	5751	59	49.6	0.90		
20.6	4581	47	49.6	1.35		

Na [r/min]	Ma [Nm]	i	Fra [kN]	f_B	Machine model	Number of poles
11kW			Frequency	Hz	50	
			Number of poles	P	4	6
			Rotational speed n	r/min	1460	970
22.6	4191	43	49.6	1.35	B6* X9*	6P
27.7	3411	35	46.9	1.80		
33	2827	29	44.8	2.15		
42.2	2242	23	40.2	2.70		
51.1	1852	19	37.2	2.70		
57.1	1657	17	34.9	2.70		
64.7	1462	15	34.2	2.70		
74.6	1267	13	33.4	2.70		
88.2	1072	11	32.6	2.70		
20.6	4598	71	30.2	0.85	B5 X8	4P
24.7	3821	59	28.1	0.90		
31.1	3044	47	27.0	1.35		
34.0	2785	43	26.4	1.35		
41.7	2266	35	26.4	1.70		
50.3	1878	29	25	1.80		
63.5	1489	23	22.2	2.25		
76.8	1230	19	21.6	2.25		
85.9	1101	17	20.9	2.25		
97.3	971	15	19.2	2.25		
112.3	842	13	16.8	22		
132.7	712	11	15.4	2.25		
41.7	2266	35	11.5	0.90	B4 X6 X7	4P
50.3	1878	29	11.5	0.90		
63.5	1489	23	9.8	1.35		
76.8	1230	19	9.4	1.35		
85.9	1101	17	9.1	1.35		
97.3	971	15	8.8	1.35		
112.3	842	13	8.4	1.35		
132.7	712	11	8.0	1.35		
162.2	583	9	6.6	1.35		
85.9	1101	17	6.7	0.85	B3* X5*	4P
97.3	971	15	6.5	0.85		
112.3	842	13	6.2	0.90		
132.7	712	11	5.9	0.90		
162.2	583	9	5.5	0.90		
15kW			Frequency	Hz	50	
			Number of poles	P	4	6
			Rotational speed n	r/min	1460	970
1.7	29400	841	158.4	0	B95 X128	4P
2.0	29400	731	158.4	0		
2.2	29400	649	158.4	0		
2.5	29400	595	158.4	0		
3.0	29400	493	158.4	0		
3.7	28773	391	158.4	1.00		
4.6	23474	319	158.4	1.25		
5.8	18618	253	158.4	1.55		
2.5	21500	595	91.7	0	B85 X118	4P
3.0	21500	493	91.7	0		
3.7	21500	391	91.7	0		
4.6	21500	319	91.7	0		
5.1	21267	289	91.7	1.00		
5.8	18618	253	91.7	1.15		
7.8	13761	187	91.7	1.55		
11.5	930c	121	91.7	1.65		

Notes:

1. Models with * cannot be equipped with direct-connected motors;
2. Models with "O" in the f_B column cannot use motors with 100% power. Please keep the load torque below "Ma" in the table during operation. Please install your own security device to protect the host;
3. All models can be configured with 6P and 8P motors corresponding to the same motor base number;
4. The allowable output torque and allowable radial force values of the three-stage transmission refer to the maximum values in the two-stage transmission.

Selection parameter table

Na [r/min]	Ma [Nm]	i	Fra [kN]	f_B	Machine model	Number of poles
15kW			Frequency	Hz	50	
			Number of poles	P	4	6
			Rotational speed n	r/min	1460	970
11.1	11563	87	72.5	0.80	B7* X10*	6P
13.7	9437		/2.5	1.15		
16.4	7842	59	66.5	1.40		
20.6	6247	47	63.4	1.65		
22.6	5715	43	62.2	1.90		
27.7	4652	35	58.9	1.90		
33.4	3854	29	56.2	2.60		
42.2	3057	23	47.8	3.20		
57.1	2260	17	47.8	3.20		
62.6	2060	15	44.4	3.20		
84.3	1528	1	40.9	3.20		
20.6	6247	47	49.6	0.95	B6* X9*	6P
22.6	5715	43	49.6	0.95		
27.7	4652	35	46.9	1.35		
33.4	3854	29	44.8	1.60		
42.2	3057	23	40.2	1.95		
51.1	2525	19	37.2	1.95		
57.1	2260	17	34.9	1.95		
64.7	1994	15	34.2	1.95		
74.6	1728	13	33.4	1.95		
88.2	1462	11	32.6	1.95		
31.1	4150	47	27.0	0.95	B5 X8	4P
34.0	3797	43	26.4	0.95		
41.7	3091	35	26.4	1.25		
50.3	2561	29	25.2	1.35		
63.5	2031	23	22.2	1.65		
76.8	1678	19	21.6	1.65		
85.9	1501	17	20.9	1.65		
97.3	1325	15	19.2	1.65		
112.3	1148	13	16.8	1.65		
132.7	971	11	15.4	1.65		
63.5	2031	23	9.8	0.95	B4 X6 X7	4P
76.8	1678	19	9.4	0.95		
85.9	1501	17	9.1	0.95		
97.3	1325	15	8.8	0.95		
112.3	1148	13	8.4	0.95		
132.7	971	11	8.0	0.95		
162.2	795	9	6.6	0.95		
18.5kW			Frequency	Hz	50	
			Number of poles	P	4	6
			Rotational speed n	r/min	1470	980
1.7	29400	841	158.4	0	B95 X128	4P
2.0	29400	731	158.4	0		
2.3	29400	649	158.4	0		
2.5	29400	595	158.4	0		
3.0	29400	493	158.4	0		
3.8	29400	391	158.4	0		
4.6	28755	319	158.4	1.00		
5.8	22805	253	158.4	1.25		
3.8	21500	391	91.7	0	B85 X118	4P
4.6	21500	319	91.7	0		
5.1	21500	289	91.7	0		
5.8	21500	253	91.7	0		
7.9	16856	187	91.7	1.25		
11.6	11403	121	91.7	1.35		

Na [r/min]	Ma [Nm]	i	Fra [kN]	f_B	Machine model	Number of poles
18.5kW			Frequency	Hz	50	
			Number of poles	P	4	6
			Rotational speed n	r/min	1470	980
11.1	14261	87	91.7	1.30	B8* X11*	6P
13.7	11639		91.7	1.65		
16.4	9672	59	84.1	2.00		
22.6	7049	43	78.7	2.70		
27.7	5737	35	74.5	3.25		
13.7	11639	7	72.5	0.90	B7* X10*	6P
16.4	9672	59	66.5	1.15		
20.6	7704	47	63.4	1.35		
22.6	7049	43	62.2	1.50		
27.7	5737	35	58.9	1.50		
33.4	4754	29	56.2	2.10		
42.2	3770	23	47.8	2.60		
57.1	2787	17	47.8	2.60		
62.6	2541	15	44.4	2.60		
84.3	1885	11	40.9	2.60		
22.6	7049	43	49.6	0.80	B6* X9*	6P
27.7	5737	35	46.9	1.05		
334	4754	29	44.8	1.30		
42.2	3770	23	40.2	1.60		
51.1	3115	19	37.2	1.60		
57.1	2787	17	34.9	1.60		
64.7	2459	15	34.2	1.60		
74.6	2131	13	33.4	1.60		
88.2	1803	11	32.6	1.60		
42.0	3786	35	26.4	1.00	B5* X8*	4P
50.7	3137	29	25.2	1.00		
63.9	2488	23	22.2	1.35		
77.4	2055	19	21.6	1.35		
86.5	1839	17	20.9	1.35		
98.0	1623	15	19.2	1.35		
113.1	1406	13	16.8	1.35		
133.6	1190	11	15.4	1.35		
22kW			Frequency	Hz	50	
			Number of poles	P	4	6
			Rotational speed n	r/min	1470	980
11.1	16960	87	91.7	1.10	B8* X11*	6P
13.7	13841	71	91.7	1.40		
16.4	11501	59	84.1	1.70		
22.6	8382	43	787	2.25		
27.7	6823	35	74.5	2.75		
33.4	5653	29	71.2	3.35		
42.2	4438	23	64.4	3.35		
57.1	3280	17	60.5	3.35		
84.3	2219		54.0	3.35		
16.4	11501	59	66.5	0.95	B7* X10*	6P
20.6	9162	47	63.4	1.10		
22.6	8382	43	62.2	1.30		
27.7	6823	35	58.9	1.30		
33.4	5653	29	56.2	1.75		
42.2	4484	23	47.8	2.15		
57.1	3314	17	47.8	2.15		
62.6	3022	15	44.4	2.15		
84.3	2242	11	40.9	2.15		

Notes:

1. Models with * cannot be equipped with direct-connected motors;
2. Models with "O" in the f_B column cannot use motors with 100% power. Please keep the load torque below "Ma" in the table during operation. Please install your own security device to protect the host;
3. All models can be configured with 6P and 8P motors corresponding to the same motor base number;
4. The allowable output torque and allowable radial force values of the three-stage transmission refer to the maximum values in the two-stage transmission.

Selection parameter table

Na [r/min]	Ma [Nm]	i	Fra [kN]	f_B	Machine model	Number of poles
22kW			Frequency	Hz	50	
			Number of poles	P	4	6
			Rotational speed n	r/min	1470	980
27.7	6823	35	46.9	0.90	B6* X9*	6P
33.4	5653	29	44.8	1.05		
42.2	4484	23	40.2	1.35		
51.1	3704	19	37.2	1.35		
57.1	3314	17	34.9	1.35		
64.7	2924	15	34.2	1.35		
74.6	2534	13	33.4	1.35		
88.2	2144	11	32.6	1.35		
30kW			Frequency	Hz	50	
			Number of poles	p	4	6
			Rotational speed n	r/min	1470	980
11.3	22891	87	158.4	1.30	B9* X12*	6P
13.8	18681	71	158.4	1.60		
16.6	15524	59	158.4	1.85		
22.8	11314	43	150.0	2.45		
28.0	9209	35	121.2	2.90		
33.8	7630	29	121.2	3.35		
42.6	6052	23	121.2	3.35		
11.3	22891	87	91.7	0.80	B8* X11*	6P
13.8	18681	71	91.7	1.00		
16.6	15524	59	84.1	1.25		
22.8	11314	43	78.7	1.65		
28.0	9209	35	74.5	2.00		
33.8	7630	29	71.2	2.45		
42.6	6052	23	64.4	2.45		
57.6	4473	17	60.5	2.45		
85.2	3026	11	54.0	2.45		
22.8	11314	43	62.2	0.95	B7* X10*	6P
28.0	9209	35	58.9	0.95		
33.8	7630	29	56.2	1.30		
42.6	6052	23	47.8	1.60		
57.6	4473	17	47.8	1.60		
63.2	4078	15	44.4	1.60		
85.2	3026	11	40.9	1.60		
42.6	6052	23	402	0.95	B6* X9*	6P
51.6	4999	19	37.2	0.95		
57.6	4473	17	34.9	0.95		
65.3	3947	15	34.2	0.95		
75.4	3420	13	33.4	0.95		
89.1	2894	11	32.6	0.95		
37kW			Frequency	Hz	50	
			Number of poles	p	4	6
			Rotational speed n	r/min	1475	980
11.3	28232	87	158.4	1.05	B9* X12*	6P
13.8	23040	71	158.4	1.30		
16.6	19146	59	158.4	1.50		
22.8	13954	43	150.0	2.00		
28.0	11358	35	121.2	2.35		
33.8	9411	29	121.2	2.70		
42.6	7464	23	121.2	2.70		

Na [r/min]	Ma [Nm]	i	Fra [kN]	f_B	Machine model	Number of poles
37kW			Frequency	Hz	50	
			Number of poles	P	4	6
			Rotational speed n	r/min	1475	980
16.6	19146	59	84.1	1.00	B8* X11*	6P
22.8	13954	43	78.7	1.35		
28.0	11358	35	74.5	1.60		
33.8	9411	29	71.2	2.00		
42.6	7464	23	64.4	2.00		
57.6	5517	17	60.5	2.00		
85.2	3732	11	54.0	2.00		
33.8	9411	29	56.2	1.00	B7* X10*	6P
42.6	7464	23	47.8	1.30		
57.6	5517	17	47.8	1.30		
63.2	5030	15	44.4	1.30		
85.2	3732	11	40.9	1.30		
45kW			Frequency	Hz	50	
			Number of poles	p	4	6
			Rotational speed n	r/min	1475	980
13.8	28021	71	158.4	1.05	B9* X12*	6P
16.6	23285	59	158.4	1.25		
22.8	16971	43	150.0	1.65		
28.0	13813	35	121.2	1.95		
33.8	11445	29	121.2	2.25		
42.6	9077	23	121.2	2.25		
22.8	16971	43	78.7	1.10	B8* X11*	6P
28.0	13813	35	74.5	1.35		
33.8	11445	29	71.2	1.65		
42.6	9077	23	64.4	1.65		
57.6	6709	17	60.5	1.65		
85.2	4539	11	54.0	1.65		
33.8	11445	29	56.2	0.85	B7* X10*	6P
42.6	9077	23	47.8	1.00		
57.6	6709	17	47.8	1.00		
63.2	6117	15	44.4	1.00		
85.2	4539	11	40.9	1.00		
55kW			Frequency	Hz	50	
			Number of poles		4	6
			Rotational speed n	r/min	1480	980
16.6	28460	59	158.4	1.00	B9* X12*	6P
22.8	20742	43	150.0	1.35		
28.0	16883	35	121.2	1.60		
33.8	13989	29	121.2	1.80		
42.6	11095	23	121.2	1.80		
28.0	16883	35	74.5	1.10	B8* X11*	6P
33.8	13989	29	71.2	1.35		
42.6	11095	23	64.4	1.35		
57.6	8200	17	60.5	1.35		
85.2	5547	11	54.0	1.35		
75kW			Frequency	Hz	50	
			Number of poles	p	4	6
			Rotational speed n	r/min	1480	980
228	27999	43	150.0	0.95	B9* X12*	6P
28.0	22790	35	121.2	1.15		
33.8	18883	29	121.2	1.35		
42.6	14976	23	121.2	1.35		

Notes:

1. Models with * cannot be equipped with direct-connected motors;

2.Models with "O" in the f_B column cannot use motors with 100% power. Please keep the load torque below "Ma" in the table during operation. Please install your own security device to protect the host;

3. All models can be configured with 6P and 8P motors corresponding to the same motor base number;

4. The allowable output torque and allowable radial force values of the three-stage transmission refer to the maximum values in the two-stage transmission.

3 Outline and Installation Dimensions

3.1 Overall installation dimensions of BW, BWD, XW, XWD types (single-stage)

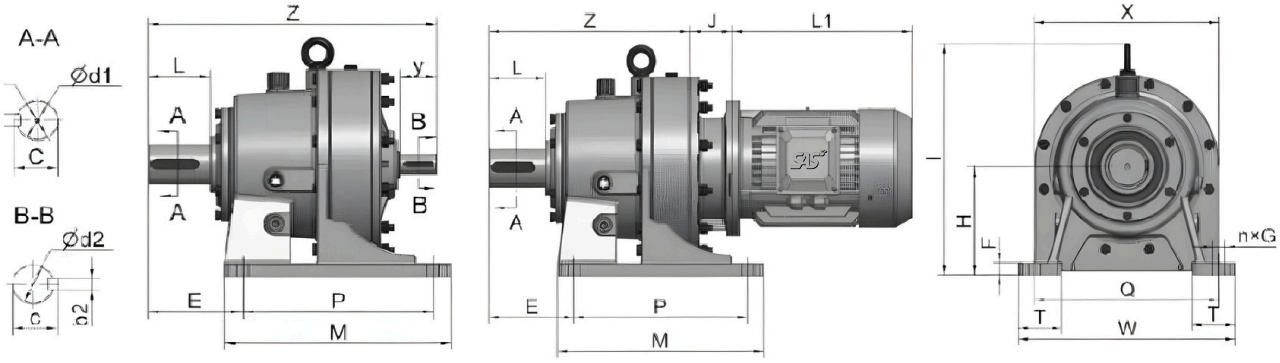

Machine model	Center height H	Shaft end size								Installation dimensions								Overall dimensions					
		Output shaft				Input shaft														Z			
		d1 (h6)	b1	C	L	d2 (h6)	b2	C	y	E	F	P	Q	S	T	N	φG	M	W	BW	BWD	1	X
BW.BWD09-9																							
B09	80	22	6	24.5	30	15	5	17	22	46.5	12	76	120	M5	30	4	11	100	144	192	142	155	140
B0	100	30	8	33	35	15	5	17	22	94	15	90	150	M8	35	4	11	120	185	214	165	190	168
B1	120	35	10	38	56	18	6	20.5	35	125	14	110	240	M10	55	4	13	160	280	263	194	250	200
B2	140	45	14	48.5	71	22	6	24.5	40	144	19	150	280	M10	60	4	13	200	320	320	246	296	240
B3	160	55	16	59	80	30	8	33	55	156	23	200	340	M12	75	4	17	250	390	390	294	355	300
B4	200	70	20	74.5	104	35	10	38	62	157	23	320	340	M12	80	4	22	380	400	481	370	430	340
B5	240	90	25	95	122	45	14	48.5	70	160	33	380	420	M16	80	4	22	440	470	564	438	513	400
B6	280	100	28	106	139	50	14	53.5	80	199	35	440	500	M20	90	4	26	520	560	670	528	605	500
B7	325	110	28	116	150	55	16	59	90	230	45	250×2	630	M24	105	6	30	600	690	775	578	706	575
B8	420	130	32	137	202	70	20	74.5	120	325	50	330×2	800	M30	140	6	32	810	880	1063	814	880	700
B9	540	180	45	190	327	90	25	95	150	481	58	420×2	1050	M42	200	6	45	1040	1160	1458	1151	1160	950
XW.XWD1-12																							
X1	100	25	8	28	35	15	5	17	22	61	12	90	150	M5	30	4	12	120	180	199	147	175	140
X2	100	25	8	28	33	15	5	17	22	101	15	90	180	M8	45	4	12	120	210	216	164	190	168
X3	140	35	10	38	56	18	6	20.5	35	152	18	100	250	M10	60	4	16	150	290	263	194	270	200
X4	150	45	14	48.5	73	22	6	24.5	40	168	19	145	290	M10	65	4	16	195	330	324	246	316	240
X5	160	55	16	59	91	30	8	33	55	204	23	150	370	M12	70	4	16	260	410	401	305	356	300
X6	200	65	18	69	89	35	10	38	62	125	27	275	380	M12	75	4	22	335	430	466	359	425	340
X7	220	80	22	85	107	40	12	43	65	143	27	320	420	M12	90	4	22	380	470	486	377	484	340
X8	250	90	25	95	122	45	14	48.5	70	157	35	380	480	M16	100	4	22	440	530	564	438	514	400
X9	290	100	28	106	141	50	14	53.5	80	186	40	480	560	M20	120	4	26	560	620	691	551	614	500
X10	325	110	28	116	150	55	16	59	90	230	45	250×2	630	M24	105	6	30	600	690	775	578	706	575
X11	420	130	32	137	202	70	20	74.5	120	325	50	330×2	800	M30	140	6	32	810	880	1063	814	880	700
X12	540	180	45	190	327	90	25	95	150	481	58	420×2	1050	M42	200	6	45	1040	1160	1458	1151	1160	950

3.2 Overall installation dimensions of BL, BLD, XLW, XLD types (single-stage)

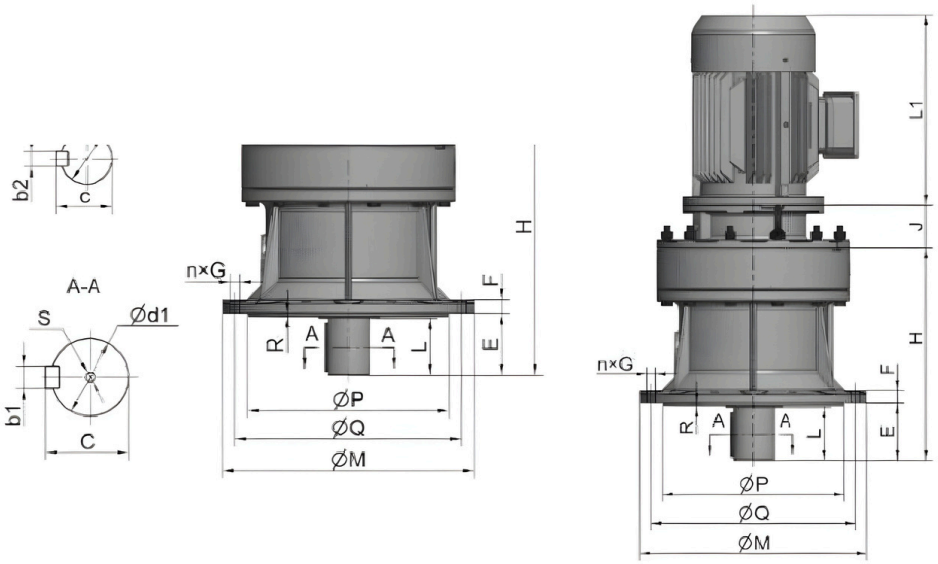

Machine model	Shaft end size								Installation dimensions								Overall dimensions		
	Output shaft				Input shaft												H		
	d1 (h6)	b1	C	L	d2 (h6)	b2	C	y	E	F	φG	N	P (h9)	Q	R	S	BL	BLD	M
BLBLD09-9																			
B09	22	6	245	30	15	5	17	22	35	10	11	4	110	134	3	M5	192	142	159
B0	30	8	33	35	15	5	17	22	39	14	11	4	140	160	3	M8	214	165	188
B1	35	10	38	47	18	6	20.5	35	61	15	11	6	170	200	4	M10	263	194	230
B2	45	14	48.5	61	22	6	24.5	40	70	16	11	6	200	230	4	M10	320	246	260
B3	55	16	59	74	30	8	33	55	79	20	13	6	270	310	4	M12	390	294	340
B4	70	20	74.5	92	35	10	38	62	100	22	15	8	320	360	5	M12	479	370	400
B5	90	25	95	110	45	14	48.5	70	118	30	18	12	400	450	5	M16	564	438	490
B6	100	28	106	130	50	14	53.5	80	138	35	22	12	460	520	8	M20	668	528	580
B7	110	28	116	142	55	16	59	90	182	40	22	12	520	590	10	M24	775	578	650
B8	130	32	137	202	70	20	74.5	120	211	50	38	12	680	800	10	M30	1061	814	880
B9	180	45	190	320	90	25	95	150	370	60	39	8	900	1020	10	M42	1459	1151	1160
XW.XWD1-12																			
X1	25	8	28	36	15	5	17	22	41	10	12	4	110	134	3	M5	201	147	159
X2	25	8	28	33	15	5	17	22	39	14	12	6	130	160	3	M8	216	164	180
X3	35	10	38	47	18	6	20.5	35	51	15	12	6	170	200	4	M10	263	194	230
X4	45	14	48.5	63	22	6	24.5	40	79	15	12	6	200	230	4	M10	324	250	260
X5	55	16	59	85	30	8	33	55	90	20	13	6	270	310	4	M12	401	305	340
X6	65	18	69	80	35	10	38	62	90	22	16	8	316	360	5	M12	466	359	400
X7	80	22	85	97	40	12	43	65	114	22	18	8	345	390	5	M12	486	377	430
X8	90	25	95	110	45	14	48.5	70	118	30	18	12	400	450	5	M16	564	438	490
X9	100	28	106	134	50	14	53.5	80	170	35	22	12	455	520	8	M20	694	551	580
X10	110	28	116	142	55	16	59	90	182	40	22	12	520	590	10	M24	775	578	650
X11	130	32	137	202	70	20	74.5	120	211	50	38	12	680	800	10	M30	1061	814	880
X12	180	45	190	320	90	25	95	150	370	60	39	8	900	1020	10	M42	1459	1151	1160

3.3 Overall installation dimensions of BWE, BWED, XWE, XWED types (double-stage)

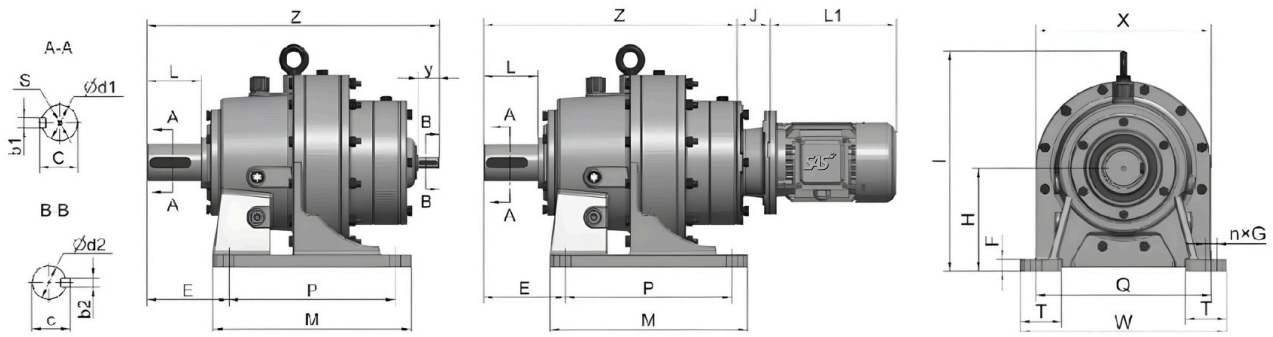

Machine model	Center height H	Shaft end size								Installation dimensions								Overall dimensions					
		Output shaft				Input shaft														Z		I	X
		d1 (h6)	b1	C	L	d2 (h6)	b2	C	y	E	F	P	Q	S	T	N	φG	M	W	BWE	BWED		
BWE.BWED10-95																							
B10	120	35	10	38	56	15	5	17	22	125	14	110	240	M10	55	4	13	160	280	317	267	250	200
B20	140	45	14	48.5	71	15	5	17	22	144	19	150	280	M10	60	4	13	200	320	369	315	306	240
B31	160	55	16	59	80	18	6	20.5	35	156	23	200	340	M12	75	4	17	250	390	443	376	356	300
B41	200	70	20	74.5	104	18	6	205	35	157	23	320	340	M12	80	4	22	380	400	523	454	425	340
B42	200	70	20	74.5	104	22	6	24.5	40	157	23	320	340	M12	80	4	22	380	400	554	479	425	340
B52	240	90	25	95	122	22	6	24.5	40	160	33	380	420	M16	80	4	22	440	470	623	548	504	400
B53	240	90	25	95	122	30	8	33	55	160	33	380	420	M16	80	4	22	440	470	661	561	504	400
B63	280	100	28	106	139	30	8	33	55	199	35	440	500	M20	90	4	26	520	560	746	645	605	500
B64	280	100	28	106	139	35	10	38	62	199	35	440	500	M20	90	4	26	520	560	783	671	605	500
B74	325	110	28	116	150	35	10	38	62	230	45	250×2	630	M24	105	6	30	600	690	836	725	706	575
B84	420	130	32	137	202	35	10	38	62	325	50	330×2	800	M30	140	6	32	810	880	1074	962	880	700
B85	420	130	32	137	202	45	14	48.5	70	325	50	330×2	800	M30	140	6	32	810	880	1098	970	880	700
B95	540	180	45	190	327	45	14	48.5	70	481	58	420×2	1050	M42	200	6	45	1040	1160	440	1320	1160	950
XWE.XWED32-128																							
X32	140	35	10	38	56	15	5	17	22	152	18	100	250	M10	60	4	16	150	290	317	264	270	200
X42	150	45	14	48.5	73	15	5	17	22	168	19	145	290	M10	65	4	16	195	330	370	315	316	240
X53	160	55	16	59	91	18	6	20.5	35	204	23	150	370	M12	70	4	16	260	410	457	387	356	300
X63	200	65	18	69	89	18	6	20.5	35	125	27	275	380	M12	75	4	22	335	430	510	441	425	340
X64	200	65	18	69	89	22	6	24.5	40	125	27	275	380	M12	75	4	22	335	430	541	466	425	340
X74	220	80	22	85	107	22	6	24.5	40	143	27	320	420	M12	90	4	22	380	470	561	486	484	340
X84	250	90	25	95	122	22	6	24.5	40	157	35	380	480	M16	100	4	22	440	530	626	548	514	400
X85	250	90	25	95	122	30	8	33	55	157	35	380	480	M16	100	4	22	440	530	662	586	514	400
X95	290	100	28	106	141	30	8	33	55	186	40	480	560	M20	120	4	26	560	620	768	667	614	500
X96	290	100	28	106	141	35	10	38	62	186	40	480	560	M20	120	4	26	560	620	805	695	614	500
X106	325	110	28	116	150	35	10	38	62	230	45	250×2	630	M24	105	6	30	600	690	836	725	706	575
X117	420	130	32	137	202	40	12	43	65	325	50	330×2	800	M30	140	6	32	810	880	1077	962	880	700
X118	420	130	32	137	202	45	14	48.5	70	325	50	330×2	800	M30	140	6	32	810	880	098	970	880	700
X128	540	180	45	190	327	45	14	48.5	70	481	58	420×2	1050	M42	200	6	45	1040	1160	1440	1320	1160	950

3.4 Overall installation dimensions of BLE, BLED, XLE, XLE types (double-stage)

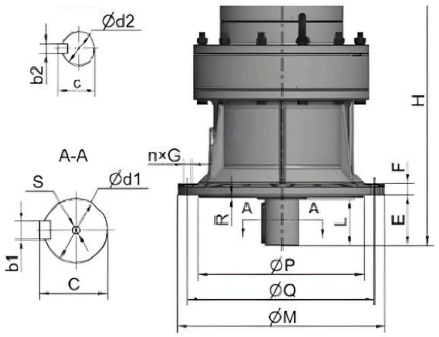

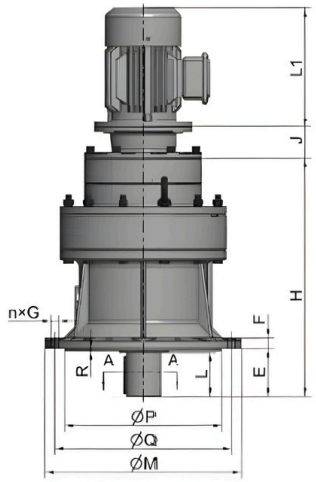

Machine model	Shaft end size								Installation dimensions								Overall dimensions		
	Output shaft				Input shaft				E	F	φG	N	P (h9)	Q	R	S	H		M
	d1 (h6)	b1	C	L	d2 (h6)	b2	C	y									BLE	BLED	
BLE.BLED10-95																			
B10	35	10	38	47	15	5	17	22	61	15	11	6	170	200	4	M10	317	267	230
B20	45	14	48.5	61	15	5	17	22	70	16	11	6	200	230	4	M10	368	318	260
B31	55	16	59	74	18	6	20.5	35	79	20	13	6	270	310	4	M12	446	376	340
B41	70	20	74.5	92	18	6	20.5	35	100	22	15	8	320	360	5	M12	521	454	400
B42	70	20	74.5	92	22	6	24.5	40	100	22	15	8	320	360	5	M12	554	479	400
B52	90	25	95	110	22	6	24.5	40	118	30	18	12	400	450	5	M16	627	548	490
B53	90	25	95	110	30	8	33	55	118	30	18	12	400	450	5	M16	663	561	490
B63	100	28	106	130	30	8	33	55	138	35	22	12	460	520	8	M20	745	645	580
B64	100	28	106	130	35	10	38	62	138	35	22	12	460	520	8	M20	780	671	580
B74	110	28	116	142	35	10	38	62	182	40	22	12	520	590	10	M24	836	725	650
B84	130	32	137	202	35	10	38	62	211	50	38	12	680	800	10	M30	1074	962	880
B85	130	32	137	202	45	14	48.5	70	211	50	38	12	680	800	10	M30	1098	970	880
B95	180	45	190	320	45	14	48.5	70	370	60	39	8	900	1020	10	M42	1440	1320	1160
XLE.XLED32-128																			
X32	35	10	38	47	15	5	17	22	51	15	12	6	170	200	4	M10	317	264	230
X42	45	14	48.5	63	15	5	17	22	79	15	12	6	200	230	4	M10	370	320	260
X53	55	16	59	85	18	6	20.5	35	90	20	13	6	270	310	4	M12	457	389	340
X63	65	18	69	80	18	6	20.5	35	90	22	16	8	316	360	5	M12	510	441	400
X64	65	18	69	80	22	6	24.5	40	90	22	16	8	316	360	5	M12	546	466	400
X74	80	22	85	97	22	6	24.5	40	114	22	18	8	345	390	5	M12	561	486	430
X84	90	25	95	110	22	6	24.5	40	118	30	18	12	400	450	5	M16	627	548	490
X85	90	25	95	110	30	8	33	55	118	30	18	12	400	450	5	M16	663	588	490
X95	100	28	106	134	30	8	33	55	170	35	22	12	455	520	8	M20	770	667	580
X96	100	28	106	134	35	10	38	62	170	35	22	12	455	520	8	M20	807	694	580
X106	110	28	116	142	35	10	38	62	182	40	22	12	520	590	10	M24	836	725	650
X117	130	32	137	202	40	12	43	65	211	50	38	12	680	800	10	M30	1077	983	880
X118	130	32	137	202	45	14	48.5	70	211	50	38	12	680	800	10	M30	1098	970	880
X128	180	45	190	320	45	14	48.5	70	370	60	39	8	900	1020	10	M42	1440	1320	1160

3.5 Connecting flange dimension chart of motor connector type

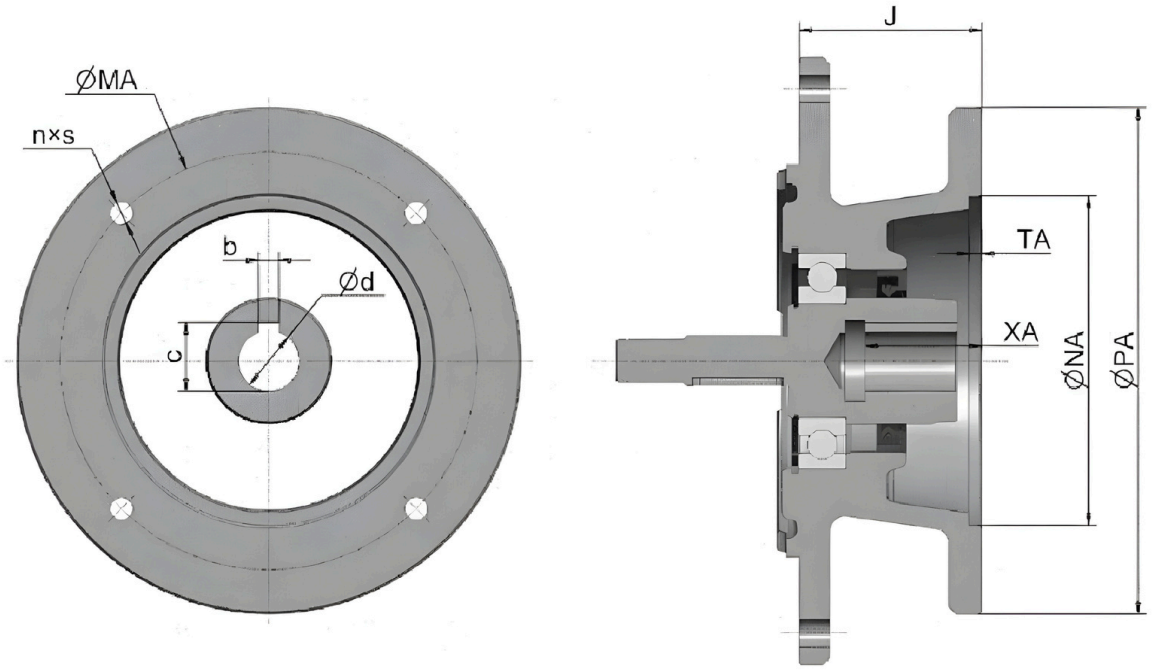

Machine model	Configuration motor			Dimensions									
	kW	Base No.	Number of poles	NA	MA	PA	J	TA	n×S	XA	d	b	c
B09/X1	0.18	63	4P	95	115	140	54	4	4×M8	23	11	4	12.8
	0.25、0.37	71		110	130	160	71	4	4×M8	30	14	5	16.3
	0.55	80		130	165	200	71	4	4×M10	40	19	6	21.8
B0/X2 B10/X32 B20/X42	0.18	63		95	115	140	55	4	4×M8	23	11	4	12.8
	0.25, 0.37	71		110	130	160	72	4	4×M8	30	14	5	16.3
	0.55, 0.75	80		130	165	200	82	4	4×M10	40	19	6	21.8
	1.1	90S		130	165	200	82	4	4×M10	50	24	8	27.3
B1/X3 B31/X53 B41/63	0.25, 0.37	71		110	130	160	84	4	4×M8	30	14	5	16.3
	0.55, 0.75	80		130	165	200	79	4	4×M10	40	19	6	21.8
	1.1, 1.5	90		130	165	200	79	4	4×M10	50	24	8	27.3
	2.2	100L		180	215	250	88	4.5	4×M12	60	28	8	31.3
B2/X4 B42/X64 B52/X84	0.55、0.75	80		130	165	200	72	5	4×M10	40	19	6	21.8
	1.1、1.5	90		130	165	200	72	5	4×M10	50	24	8	27.3
	2.2、3	100L		180	215	250	72	5	4×M12	60	28	8	31.3
	4	112M		180	215	250	72	5	4×M12	60	28	8	31.3

Machine model	Configure motor			Size									
	kW	Frame size	Number of poles	NA	MA	PA	J	TA	n×S	XA	d	b	c
B3/X5 B53/X85 B63/X95	0.55、0.75	80	4P	130	165	200	73	5	4×M10	40	19	6	21.8
	1.1, 1.5	90		130	165	200	73	5	4×M10	50	24	8	27.3
	2.2, 3	100L		180	215	250	73	5	4×M12	60	28	8	31.3
	4	112M		180	215	250	73	5	4×M12	60	28	8	31.3
	5.5、7.5	132		230	265	300	112	5	4×M12	80	38	10	41.3
	11	160M		250	300	350	151	5	4×M16	110	42	12	45.3
B4/X6/X7 B74/X106 B84/X117	2.2, 3	100L		180	215	250	76	5	4×M12	60	28	8	31.3
	4	112M		180	215	250	76	5	4×M12	60	28	8	31.3
	5.5、7.5	132		230	265	300	97	5	4×M12	80	38	10	41.3
	11	160M		250	300	350	151	5	4×M16	110	42	12	45.3
B5/X8 B85/X118 B95/X128	2.2, 3	100L		180	215	250	142	6	4×M12	60	28	8	31.3
	4	112M		180	215	250	142	6	4×M12	60	28	8	31.3
	5.5、7.5	132		230	265	300	95	5	4×M12	80	38	10	41.3
	11, 15	160		250	300	350	127	6	4×M16	110	42	12	45.3
	18.5	180M		250	300	350	127	6	4×M16	110	48	14	51.8
B6/X9	5.5	132M	6P	230	265	300	144	6	4×M12	80	38	10	41.3
	7.5、11	160		250	300	350	121	6	4×M16	110	42	12	45.3
	15	180L		250	300	350	121	6	4×M16	110	48	14	51.8
	18.5, 22	200L		300	350	400	124	6	4×M16	110	55	16	59.3
B7/X10	7.5, 11	160		250	300	350	129	6	4×M16	110	42	12	45.3
	15	180L		250	300	350	129	6	4×M16	110	48	14	51.8
	18.5, 22	200L		300	350	400	129	6	4×M16	110	55	16	59.3
	30	225M		350	400	450	161	7	8×M16	140	60	18	64.4
	37	250M		450	500	550	161	7	8×M16	140	65	18	69.4
B8/X11	18.5、22	200L		300	350	400	204	7	4×M16	110	55	16	59.3
	30	225M		350	400	450	165	7	8×M16	140	60	18	64.4
	37	250M		450	500	550	229	7	8×M16	140	65	18	69.4
	45, 55	280		450	500	550	229	7	8×M16	140	75	20	79.9
B9/X12	30	225M		350	400	450	236	7	8×M16	140	60	18	64.4
	37	250M		450	500	550	236	7	8×M16	140	65	18	69.4
	45, 55	280		450	500	550	236	7	8×M16	140	75	20	79.9
	75	315S		550	600	660	266	7	8×M20	170	80	22	85.4

3.6 Appearance and installation dimensions of three-phase asynchronous motor- B5

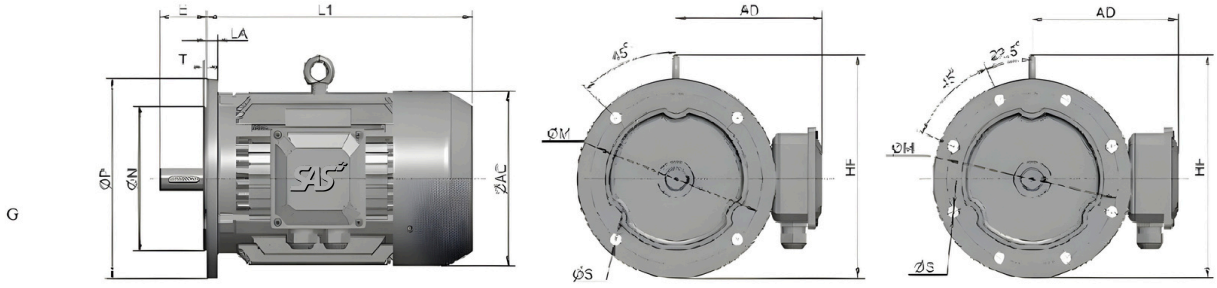

Base No. 63-20 Base No. 225-315

Number of poles	Rated power 4P (kW)	Rated power 6P (kW)	d 4-10P	E 4-10P	F 4-10P	G 4-10P	M	N	P	S	T	AC	AD	LA	HF	L1 4-10P
63M	0.18		11	23	4	12.5	115	95	140	10	3	130	70	10	130	207
71M1	0.25	0.18	14	30	5	16	130	110	160		3.5	145	80	10	145	225
71M2	0.37	0.25														
80M1	0.55	0.37	19	40	6	21.5	165	130	200	12		175	145	12	185	255
80M2	0.75	0.55														
90S	1.1	0.75	24	50	8	27						195	155	12	195	270
90L	1.5	1.1												12		295
100L1	2.2	1.5	28	60		31	215	180	250	15	4	215	180	14	245	325
100L2	3															
112M	4	2.2										240	190	14	265	340
132S	5.5	3	38	80	10	41	265	230	300			275	210	14	315	390
132M1	7.5	4												14		430
132M2		5.5														
160M	11	7.5	42	110	12	45	300	250	350	19	5	330	255	16	385	505
160L	15	11												16		560
180M	18.5		48		14	51.5						380	280	18	430	590
180L	22	15												18		630
200L1	30	18.5	55		16	59	350	300	400			420	305	18	480	660
200L2		22														
225S	37		60	140	18	64	400	350	450			470	335	20	535	675
225M	45	30	60	140		64								20		705
250M	55	37	65	140	18	69	500	450	550			510	370	22	595	770
280S	75	45	75		20	79.5						580	410	22	650	845
280M	90	55												22		895
315S	110	75	80	170	22	85	600	550	660	24	6	645	530	25	845	1100

3.7 IEC motor shape and position tolerance requirements

The user's self-equipped or self-prepared motor must meet the following geometric tolerance requirements.

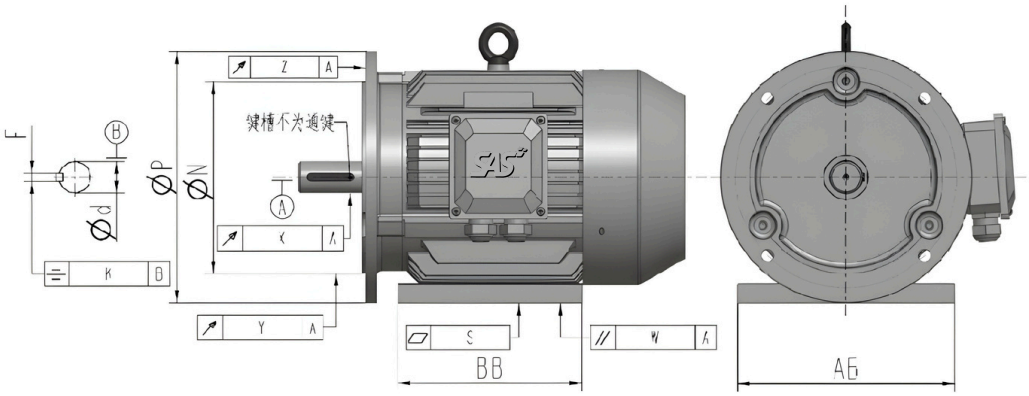

1.Various runout of motor mounting surface(B5, B35)

Number of poles	Axis runout (X)		Stop runout (Y)		Face runout (Z)	
	Shaft extension diameter (d)	Level 9 (Halfway axis extension)	Flange stop diameter (N)	Level 9	Outer circle diameter (P)	Level 9
63 ～ 315	10~18	0.04	60～95	0.08	60～95	0.08
	18～30	0.04	>95～230	0.1	>95～230	0.1
	>30～50	0.05	>230~450	0.125	>230～450	0.125
	>50～80	0.06	>450～680	0.16	>450～680	0.16

2. Tolerance of symmetry of keyway on motor shaft extension (B5, B35)

Keyway width (F)	Symmetry tolerance (K)
4	0.018
5	
6	
8	0.022
10	
12	0.030
14	
16	
18	
20	0.037
22	

3. Tolerance of parallelism of motor axis to anchor bearing surface (B35)

Number of poles	Parallelism tolerance (W)
63～250	0.40
>250～315	0.75

4. Flatness tolerance of motor anchor support surface (B35)

Maximum size in AB or BB	Flatness tolerance (S)
>100～160	0.12
>160～250	0.15
>250～400	0.20
>400～630	0.25
>630～1000	0.30

3.8 Reducer and motor weight

1) Weight of the first-stage-motor and direct-coupled reducer (unit: kg)

Specifications	BW09	BW0	BW1	BW2	BW3	BW4	BW5	XW1	XW2	XW3
Weight	8	9	18	31	54	93	145	9	9	18
Specifications	XW4	XW5	XW6	XW7	XW8	BL09	BL0	BL1	BL2	BL3
Weight	32	55	93	103	160	8	8	18	29	54
Specifications	BL4	BL5	XL1	XL2	XL3	XL4	XL5	XL6	XL7	XL8
Weight	90	146	8	8	18	29	54	93	98	146

2) Weight of primary motor receiver type/twin-shaft type reducer (unit: kg)

Specifications	BW09	BW0	BW1	BW2	BW3	BW4	BW5	BW6	BW7	BW8	BW9	XW1
Weight	12	15	25	42	71	119	181	347	500	1047	2347	13
Specifications	XW2	XW3	XW4	XW5	XW6	XW7	XW8	XW9	XW10	XW11	XW12	BL09
Weight	15	25	42	72	119	129	197	348	500	1047	2347	12
Specifications	BLO	BL1	BL2	BL3	BL4	BL5	BL6	BL7	BL8	BL9	XL1	XL2
Weight	14	25	40	71	116	183	344	512	1010	2416	12	14
Specifications	XL3	XL4	XL5	XL6	XL7	XL8	XL9	XL10	XL11	XL12		
Weight	25	40	71	119	123	183	353	512	1010	2416		

3) Weight of the second-stage-motor and direct-coupled reducer (unit: kg)

Specifications	BWE10	BWE20	BWE31	BWD41	BWE42	BWE52	BWE53	BWE63	BWE64	BWE74	BWE84
Weight	28	42	74	117	127	186	196	357	378	534	1024
Specifications	BWE85	BWE95	XWE32	XWE42	XWE53	XWE63	XWE64	XWE74	XWE84	XWE85	XWE95
Weight	1054	2243	28	43	75	117	127	137	201	211	358
Specifications	XWE96	XWE106	XWE117	XWE118	XWE128	BLE10	BLE20	BLE31	BLE41	BLE42	BLE52
Weight	378	534	1024	1054	2243	28	42	73	114	124	188
Specifications	BLE53	BLE63	BLE64	BLE74	BLE84	BLE85	BLE95	XLE32	XLE42	XLE53	XLE63
Weight	198	354	373	544	987	1017	2174	28	42	73	117
Specifications	XLE64	XLE74	XLE84	XLE85	XLE95	XLE96	XLE106	XLE117	XLE118	XLE128	
Weight	127	131	188	198	363	383	544	987	1017	2174	

4) Weight of secondary motor receiver type/twin-shaft type reducer (unit: kg)

Specifications	BWE10	BWE20	BWE31	BWD41	BWE42	BWE52	BWE53	BWE63	BWE64	BWE74	BWE84
Weight	34	49	81	124	138	197	213	374	421	557	1050
Specifications	BWE85	BWE95	XWE32	XWE42	XWE53	XWE63	XWE64	XWE74	XWE84	XWE85	XWE95
Weight	1090	2210	34	50	82	124	138	148	212	228	380
Specifications	XWE96	XWE106	XWE117	XWE118	XWE128	BLE10	BLE20	BLE31	BLE41	BLE42	BLE52
Weight	422	557	1050	1090	2210	34	47	81	121	135	199
Specifications	BLE53	BLE63	BLE64	BLE74	BLE84	BLE85	BLE95	XLE32	XLE42	XLE53	XLE63
Weight	215	371	417	569	1013	1053	2279	34	48	81	124
Specifications	XLE64	XLE74	XLE84	XLE85	XLE95	XLE96	XLE106	XLE117	XLE118	XLE128	
Weight	138	142	199	215	375	427	569	1013	1053	2279	

Note: The weight of the above reducer is an average value, excluding the weight of the motor, and is for reference only.

5) Weight of three-phase asynchronous motor-B5 (unit: kg)

Motor model	63M1-4	71M1-4	71M2-4	80M1-4	80M2-4	90S-4	90L-4	100L1-4	100L2-4	112M-4	132S-4
Rated power(kW)	0.18	0.25	0.37	0.55	0.75	1.1	1.5	2.2	3	4	5.5
Weight (kg)	8	10	10.5	14	14.7	21	27.5	31	35	41	65
Motor model	132M-4	160M-4	160L-4	180M-4	180L-4	200L-4	225S-4	225M-4	250M-4	280S-4	
Rated power(kW)	7.5	11	15	18.5	22	30	37	45	55	75	
Weight (kg)	71.5	110	132	164	190	245	285	325	400	553	
Motor model	180L-6	200L1-6	200L2-6	225M-6	250M-6	280S-6	280M-6	315S-6	315M-6	315L1-6	
Rated power(kW)	15	18.5	22	30	37	45	55	75	90	110	
Weight (kg)	180	222	235	290	375	492	550	930	1030	1150	

Note: The motor weight of different manufacturers is slightly different, and the above motor weight is for reference only.

4 Instructions for use and lubrication

4.1 Instructions for use

1. The reducer is suitable for 24-hour continuous working system and allows forward and reverse operation.

2. The output shaft steering of the first-stage transmission reducer is opposite to the input shaft steering, and the output shaft steering of the second-stage transmission reducer is the same as the input shaft steering.

3. The reducer has no self-locking function. If used in dangerous situations such as lifting devices, a brake motor should be selected or a brake device should be added at the input end.

4.The output shaft of the reducer cannot withstand axial forces.

5.Overload protection devices should be installed in use situations where overload may occur.

6. The base-type reducer should be installed on a very solid horizontal foundation without vibration. In applications where inclined installation must be required, the inclination of the axis of the reducer shall not be greater than ± 15 °.

7. Please contact the technical department of our company when the reducer operates in harsh working conditions, frequent starts and stops, and high or low temperature situations.

8. The shaft extension of the input shaft and output shaft of the reducer is cylindrical and connected by ordinary flat buttons. The dimensions of common flat buttons are in accordance with the provisions of GB1096 “Common Type Flat Buttons”.

9. When the reducer is connected with the coupling of the matching machinery, the coaxiality of the axial lines of the two shall not exceed the range allowed by the coupling.

10.When the reducer is connected with the gear and sprocket, the parallelism of the axial lines of the two must be guaranteed.

11. When using a sprocket for transmission, do not put the rack and pinion too loosely, otherwise it will produce impact force when starting. It is recommended to change the shell material to ductile iron to strengthen the shell strength.

12. Direct hammering should not be used when connecting couplings, gears, sprockets and other coupling parts to the output shaft of the reducer. The bolts should be screwed into the screw holes at the extended end of the shaft and pressed into them through the pressure plate.

13. The installed reducer must be trial-run before formal use. Gradually load and operate under the condition of normal no-load operation.

4.2 Instructions for lubrication

1. Lubrication method

One-stage transmission lubrication method

Machine model / Installation form	B09	B0	B1	B2	B3	B4	B5	B6	B7	B8	B9
Footplate-type M1 mounting	Grease lubrication			Oil bath lubrication							
Flange-type M4 installation						Cyclic lubrication					

Two-stage transmission lubrication method

Machine model / Installation form	B10	B20	B31	B41	B42	B52	B63	B74	B84	B85	B95
Footplate-type M1 mounting	Grease lubrication			Oil bath lubrication							
Flange-type M4 installation				Cyclic lubrication							

Notes:a.Lubrication method of X series reducer refers to corresponding B series models;

b. Please contact our technical department for other installation types.

2.All grease lubrication machines listed in the above table have been injected before leaving the factory and can be used directly. Replenish once every 1-2 months. It is recommended to use 2 # lithium grease or 00 # reducer grease. It is suitable for use at -5 ℃ ~ 55 ℃ ambient temperature. For other special environments, please contact our technical department.

3. It adopts oil lubrication models. The oil has been drained before leaving the factory. Please add enough oil according to the requirements of the oil label before use. See the table below for recommended lubricating oil.

	Domestic (Medium-loaded and extremely-pressured gear oil)	Esso	Mobil	Shell
-10℃~5℃	L-CKC68	Spartan EP 68	Mobil gear oil 626 (IOS VG68)	Omala can withstand pressure 68
0℃~35℃	L-CKC100 L-CKC150	Spartan EP 100 EP 150	Mobil gear oil 627 629 (IOS VG100, 150)	Omala can withstand pressure 100 150
30℃~50℃	L-CKC220 L-CKC320	Spartan EP 220 EP 320	Mobil gear oil 630 632 633 634 (IOS VG200, 320)	Omala can withstand pressure 220 320

4.When filling lubricating oil, the oil level should not exceed the upper limit of oil standard, nor should it be lower than the lower limit of oil standard. The oil level should be observed frequently and the lubricating oil of the same grade should be replenished in time during operation.

5.For other usage and maintenance requirements, please refer to the Product Instruction Manual,NO.002M.

5 Rack of chemical reaction tank

5.1 Rack of JBT-type (79 standard) glass-lined reaction tank

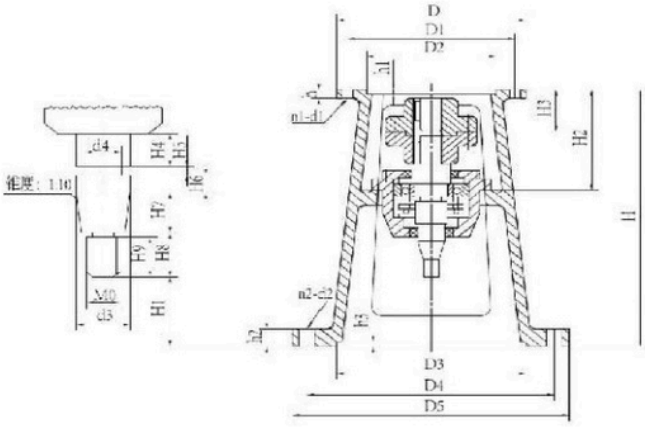

Main parameters and dimensions of JBT-type rack (79 standard)

Rack model	Input interface						Output interface						H	H1	H2	H3
	D	D1	D2	h	h1	n1-d1	D3	D4	D5	h2	h3	n2-d2				
JBT1-B1(X3)	230	200	170	20	6	6-12	220	270	305	22	7	4-24	514	157	185	75
JBT2-B1(X3)	230	200	170	20	6	6-12	250	300	335	22	7	4-24	517	150	190	80
JBT2-B2(X4)	260	230	200	20	7	6-13	250	300	335	25	7	4-24	530	134	210	94
JBT3-B2(X4)	260	230	200	20	7	6-13	295	350	392	26	7	4-26	560	164	210	94
JBT3-B3(X5)	340	310	270	20	7	6-13	295	350	392	26	7	4-26	560	164	210	100
JBT4-B3(X5)	340	310	270	20	7	6-13	345	400	442	26	7	4-26	635	203	210	100
JBT5-B3(X5)	340	310	270	22	7	6-13	390	450	498	26	7	4-30	640	193	210	100
JBT5-B4(X6)	400	360	320(316)	22	7	8-16	390	450	498	26	7	4-30	680	193	250	120
JBT6-B4(X6)	400	360	320(316)	22	7	8-16	435	500	548	30	7	8-30	736	215	250	120
JBT6-X7	430	390	345	22	7	8-18	435	500	548	30	7	8-30	736	215	250	120
JBT6-B5(X8)	490	450	400	22	7	12-18	435	500	548	30	7	8-30	736	215	270	145
JBT7-B5(X8)	490	450	460(455)	26	10	12-18	440	550	600	30	10	12-22	805	180	296	145
JBT8-B6(X9)	580	520	460(455)	30	10	12-22	500	550	600	32	10	12-22	820	150	362	177
JBT9-B7(X10)	650	590	520	30	12	12-22	560	650	700	35	10	12-27	1100	326	455	204

Rack model	H4	H5	H6	H7	H8	H9	d3	d4	MO	Volume of reaction tank (L)
JBT1-B1(X3)	45	4	6	33	34	28	30	24	M24×3	50-100
JBT2-B1(X3)	40	5	6	44	32	25	39	33	M33×3.5	200
JBT2-B2(X4)	45	5	6	47	34	27	39	32	M33×3.5	200
JBT3-B2(X4)	45	5	6	47	34	27	39	32	M33×3.5	300-500
JBT3-B3(X5)	42	5	6	47	34	27	39	32	M33×3.5	300-500
JBT4-B3(X5)	50	5	8	53	44	35	50	41.5	M42×4.5	1000-2000
JBT5-B3(X5)	55	5	8	58	49	39	60	51.5	M52×5	3000
JBT5-B4(X6)	55	5	8	58	49	39	60	51.5	M52×5	3000
JBT6-B4(X6)	75	9	8	65	52	42	70	61.5	M64×6	5000
JBT6-X7	75	9	8	65	52	42	70	61.5	M64×6	5000
5000	75	9	8	65	52	42	70	61.5	M64×6	5000
JBT7-B5(X8)	74	8	10	89	52	44	90	79	M80×6	
JBT8-B6(X9)	48	9	10	90	60	52	100	89	M90×6	
JBT9-B7(X10)	50	10	10	100	50	46	110	99	M98×6	

Note: JBT6 thread M0 can be M52×5, JBT7, JBT8, and JBT9 thread MO can be M80×2, M90×2, M98×2. Please specify when ordering.

5.2 DJ, LDJ types rack

LDJ type racks are heightened racks, with no change in dimensions except for the increase in height and (I-H1) values.

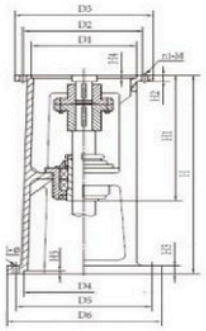

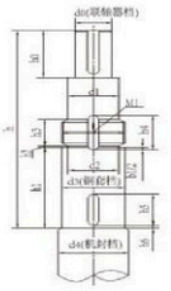

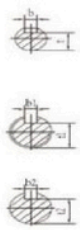

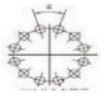

Lower flange layout

Main parameters and dimensions of DJ, LDJ types with single fulcrum frame

Rack model	H1	H2	H3	H4	H5	Input interface				Output interface				
						D1	D2	D3	n1-M	D4	D5	6	0	n2-Φ2
DJ.LDJ30-B0	320	15	20	4	6	140	160	190	4-M10	240	285	315	30	12-214
DJ.LDJ30-B1(X3)	320	15	20	4	6	170	200	230	6-M12	240	285	315	30	12-014
DJ.LDJ35-B1(X3)	334	17	20	5	6	170	200	230	6-M10	260	320	360	30	12-214
DJ.LDJ40-B2(X4)	334	17	20	4	6	200	230	260	6-012	260	320	360	30	12-014
DJ.LDJ45-B2(X4)	338	20	20	5	6	200	230	260	6-012	260	320	360	30	12-014
DJ.LDJ55-B3(X5)	372	22	24	6	6	270	310	340	6-013.5	325	400	435	30	12-214
DJ.LDJ65-B4(X6)	447	22	24	6	6	320(316)	360	400	8-015	350	420	460	30	12-218
DJ.LDJ70-B4(X6)	447	22	24	6	6	320(316)	360	400	8-215	350	420	460	30	12-018
DJ.LDJ80-B4(X6)	495	22	28	6	8	320(316)	360	400	8-015	380	455	495	30	12-018
DJ.LDJ80-X7	495	22	28	6	8	345	390	430	8-018	380	455	495	30	12-018
DJ.LDJ80-B5(X8)	495	22	28	6	8	400	450	490	12-218	380	455	495	30	12-218
DJ.LDJ90-B5(X8)	519	22	28	7	8	400	450	490	12-218	430	510	555	30	12-223
DIJDJ100-B6(X9)	535	25	28	9	10	460(455)	520	580	12-222	480	560	600	22.5	16-223
DIJD1110-B7(X10)	660	30	28	11	10	520	590	650	12-022	560	650	700	22.5	16-027
DJ.LDJ120-B7(X10)	660	30	28	11	10	520	590	650	12-022	560	650	700	22.5	16-027
DJ.LDJ130-B8(X11)	790	45	40	12	10	680	800	880	12-038	720	810	880	18	20-227
DJ.LDJ140-B8(X11)	790	45	40	12	12	680	800	880	12-038	720	810	880	18	20-227
DJ.LDJ180-B9(X12)	910	55	50	14	12	960	1080	1160	8-a39	970	1080	1160	18	20-233

Model	Agitator shaft end size																				DJ type	LDJ type
	h (B/X)	h0	h1	h2	h3	h4	h5	h6	d0	d1	d2	M1	d3(h9)	d4	b		b1	t1	b2	t2	H	
DJ.LDJ30-B0	250/254	53	103	3	13	22	30	3	30	32	32.8	M35×1.5	35	40	8	26	6	31	6	32	550	700
DJ.LDJ30-B1(X3)	250/254	53	03	3	13	22	30	3	30	32	32.8	M35×1.5	35	40	8	26	6	31	6	32	550	700
DJ.LDJ35-B1(X3)	253	53	3	3	15	24	40	3	35	42	42.8	M45×1.5	45	50	10	30	6	41	6	42	600	750
DJ.LDJ40-B2(X4)	242/249	69	13	3	15	24	40	3	40	42	42.8	M45×1.5	45	50	12	35	6	41	6	42	600	750
DJ.LDJ45-B2(X4)	246	69	113	3	15	28	40	3	45	47	47.8	M50×1.5	50	65	14	40	8	46	8	46	600	750
DLIDJ55-B3(X5)	274/272	80	18	4	15	27	40	3	55	57	57	M60×2	60	65	16	49	8	56	8	56	660	760
DJ.LDJ65-B4(X6)	333	87	143	4	18	32	50	3	65	71	72	M75×2	75	80	18	58	10	59	10	70	720	870
DJ.LDJ70-B4(X6)	333/327	87	43	4	18	32	50	3	70	71	72	M75×2	75	80	20	63	10	69	0	70	720	870
DJ.LDJ80-B4(X6)	371/340	91	63	4	18	32	60	3	80	81	82	M85×2	85	90	22	71	10	79	0	80	785	935
DJ.LDJ80-X7	371	91	163	4	18	32	60	3	80	81	82	M85×2	85	90	22	71	10	79	10	80	785	935
DJ.LDJ80-B5(X8)	365	91	163	4	18	32	60	3	80	81	82	M85×2	85	90	22	71	10	79	10	80	785	935
DJ.LDJ90-B5(X8)	375	125	68	4	20	36	60	3	90	91	92	M95×2	95	110	25	81	12	B9	2	90	805	955
DJ.LDJ100-B6(X9)	386/360	134	78	4	24	42	60	3	100	111	112	M115×2	115	125	28	90	14	09	14	10	820	1020
DJ.LDJ110-B7(X10)	456	155	78	4	24	42	60	3	110	111	112	M4115x2	115	25	28	00	14	09	4	110	1100	1150
DJ.LDJ120-B7(X10)	456	155	8	4	24	42	60	3	120	122	122	M4125x2	125	40	32	09	14	19	4	120	1100	1150
DJ.LDJ130-B8(X11)	570	197	208	4	28	46	70	3	130	135	137	M140×2	140	150	32	19	14	132	14	135	1200	1400
DJ.LDJ140-B8(X11)	570	197	208	4	28	48	70	3	140	145	147	M150×2	150	160	36	28	16	42	16	44	1200	1400
DJ.LDJ180-B9(X12)	535	235	242	4	36	58	90	3	180	185	186	M190×3	190	200	45	165	18	180	18	182	1280	1400

Note: The increased height of the LDJ-type frame with its lower space height can accommodate 205, 206, 207 double-end mechanical seals.

5.3 SJ, LSJ types rack

The LSJ type rack is a taller type. The dimensions of the rack remain unchanged except that it is taller than the 12-value.

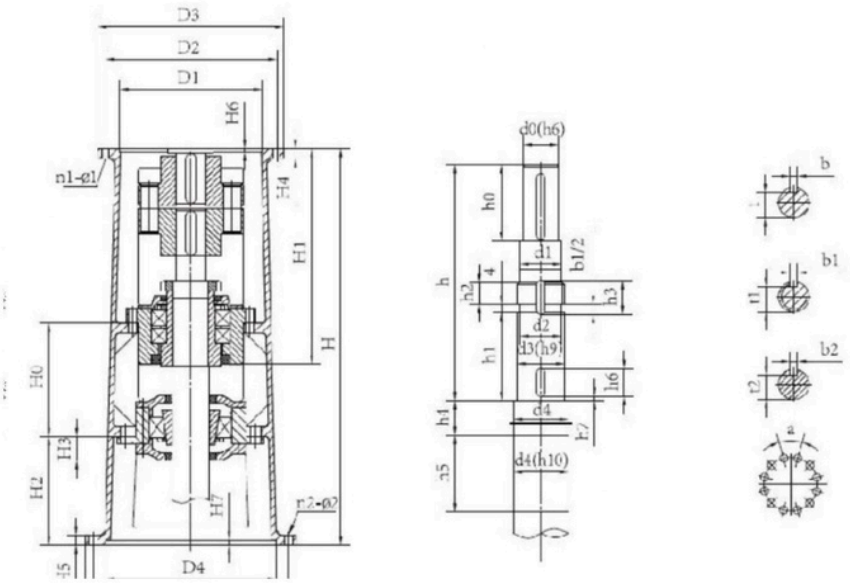

Main parameters and dimensions of SJ, LSJ types with double fulcrum frame

Rack code	H0	H1	H3	H4	H5	H6	H7	D1	D2	D3	n1-a	D4	D5	D6	d	n2-Φ
SU.LSJ55-B3(X5)	450	402	58	22	24	6	6	270	310	340	6-Φ13.5	325	400	435	30	12-Φ14
SJ.LSJ65-B4(X6)	450	487	58	22	24	6	6	320(316)	360	400	8-Φ15	350	420	460	30	12-Φ18
SJ.LSJ70-B4(X6)	450	487	58	22	24	6	6	320(316)	360	400	8-Φ15	350	420	460	30	12-Φ18
SJISJ80-B4(X6)	450	545	60	25	28	6	8	320(316)	360	400	8-Φ15	380	455	495	30	12-Φ23
SJ.LSJ80-X7	450	545	60	25	28	6	8	345	390	430	8-Φ18	380	455	495	30	12-Φ23
SJ.LSJ80-B5(X8)	450	545	60	25	28	6	8	400	450	490	12-Φ18	380	455	495	30	12-Φ23
SJ.LSJ90-B5(X8)	600	569	69	25	40	7	8	400	450	490	12-Φ18	430	510	555	30	12-Φ23
SJ.LSJ100-B6(X9)	600	685	61	30	40	9	10	460(455)	520	580	12-Φ22	480	560	600	22.5	16-Φ23
SJ.LSJ110-B7(X10)	600	685	61	38	40	11	10	520	590	650	12-Φ22	560	650	700	22.5	16-Φ27
SJ.LSJ120-B7(X10)	600	685	61	38	40	11	10	520	590	650	12-Φ22	560	650	700	22.5	16-Φ27
S.LSJ130-B8(X11)	650	761	85	40	45	11	10	680	800	880	12-Φ38	720	810	880	18	20-Φ27
SJ.LSJ140-B8(X11)	650	761	85	40	45	11	12	680	800	880	12-Φ38	720	810	880	18	20-Φ27
S.LSJ180-B9(X12)	650	910	83	50	80	14	12	960	1080	1160	8-Φ39	840	1080	1160	18	20-Φ33

Rack code	Agitator shaft end size																					SJ type		LSJ type	
	h (B/X)	h0	h1	h2	h3	h4	h5	h6	h7	d0	d1	d2	M0	d3(h9)	d4	b		b1	t1	b2	t2	H	H2	H	H2
SJ.LSJ55-B3(X5)	307/302	80	118	15	24	300	20	40	3	55	57	57	M60×2	60	65	16	49	8	56	8	56	1070	312	1220	462
SJ.LSJ65-B4(X6)	373	95	43	18	32	275	35	50	3	65	72	72	M75×2	75	80	18	58	10	69	10	70	140	307	1290	457
SU.LSJ70-B4(X6)	373/367	95	43	18	32	275	35	50	3	70	72	72	A75x	75	80	20	63	10	69	10	70	140	30	290	457
SU.LSJ80-B4(X6)	422	95	163	18	32	250	39	60	3	80	81	82	M85×2	85	90	22	71	10	79	10	80	1230	354	380	504
SJ.LSJ80-X7	422	95	163	18	32	250	39	60	3	80	81	82	M85×2	85	90	22	71	10	79	10	80	1230	354	380	504
SJ.LSJ80-B5(X8)	418	95	163	18	32	250	39	60	3	80	81	82	M85×2	85	90	22	71	10	79	10	80	1230	354	1380	04
SJ.LSJ90-B5(X8)	436	15	68	20	36	380	62	60	3	90	91	92	M95x2	95	110	25	81	12	89	12	90	1400	363	1550	513
SJ.LSJ100-B6(X9)	532/510	35	178	24	42	360	82	60	3	00	10	112	M115×2	115	125	28	90	14	109	14	109.5	1510	350	1710	550
SJ.LSJ110-B7(X10)	489	145	178	24	42	380	182	60	3	110	111	112	M115×2	115	125	28	100	14	109	14	109.5	1510	350	1710	550
SJ.LSJ120-B7(X10)	489	145	178	24	42	380	182	60	3	120	122	122	M125×2	125	140	32	09	14	19	14	119.5	1510	350	1710	550
SJ.LSJ130-B8(X11)	537	205	208	28	46	370	200	70	3	130	135	137	M140×2	140	50	32	19	14	32	14	134.5	1610	374	1810	574
S.LSJ140-B8(X11)	537	205	208	28	48	370	200	70	3	140	145	147	M150×2	150	160	36	128	16	4	16	144	1610	374	1810	574
SJ.LSJ180-B9(X12)	535	290	242	36	58	310	230	90	3	180	185	186	M150×3	190	200	45	165	18	180	18	182	1710	402	1920	602

Note: The increased height of the LSJ-type frame with its lower space height can accommodate 205, 206, 207 double-end mechanical seals.

5.4 DXJ-type rack

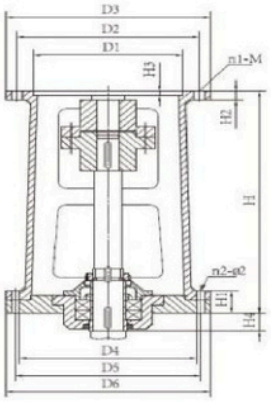

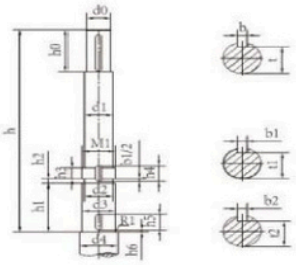

Layout plan of the lower flange hole

Main parameters and dimensions of DXJ-type single fulcrum frame

Rack model	H	H1	H2	H3	H4	Input interface				Output interface				
						D1	D2	D3	n1-M	D4	D5	D6	Q	n2-φ
DXJ30-B0	470	40	15	4	45	140	160	190	4-M10	240	285	315	30	12-φ14
DXJ30-B1(X3)	470	40	15	4	45	170	200	230	6-φ12	240	285	315	30	12-φ14
DXJ35-B1(X3)	524	48	15	5	47	170	200	230	6-M10	260	320	360	30	12-φ14
DXJ40-B2(X4)	524	48	15	4	47	200	230	260	6-φ12	260	320	360	30	12-φ14
DXJ45-B2(X4)	524	48	15	5	49	200	230	260	6-φ12	260	320	360	30	12-φ14
DXJ55-B3(X5)	580	55	20	6	47	270	310	340	6-φ13.5	325	400	435	30	12-φ14
DXJ65-B4(X6)	634	60	20	6	58	320(316)	360	400	8-φ15	350	420	460	30	12-φ18
DXJ70-B4(X6)	634	60	20	6	58	320(316)	360	400	8-φ15	350	420	460	30	12-φ18
DXJ80-B4(X6)	678	65	25	6	70	320(316)	360	400	8-φ15	380	455	495	30	12-φ18
DXJ80-X7	678	65	25	6	70	345	390	430	8-φ18	380	455	495	30	12-φ18
DXJ80-B5(X8)	678	65	25	6	70	400	450	490	12-φ18	380	455	495	30	12-φ18
DXJ90-B5(X8)	700	75	2	7	72	400	450	490	12-φ18	430	510	555	30	12-φ23
DXJ100-B6(X9)	740	80	25	9	76	460(455)	520	580	12-φ22	480	460	600	22.5	16-φ23
DXJ110-B7(X10)	840	80	30	11	76	520	590	650	12-φ22	560	650	700	22.5	16-φ27
DXJ120-B7(X10)	840	80	30	11	76	520	590	650	12-φ22	560	650	700	22.5	16-φ27
DXJ130-B8(X11)	950	94	30	11	85	680	800	880	12-φ38	720	810	880	18	20-φ27
DXJ140-B8(X11)	950	94	30	11	85	680	800	880	12-φ38	720	810	880	18	20-φ27
DXJ180-B9(X12)	1050	100	40	14	115	960	1080	1160	8-φ39	970	1080	1160	18	20-φ33

Rack model	Agitator shaft end size																			
	h (B/X)	h0	h1	h2	h3	h4	h5	h6	d0	d1	d2	M1	d3	d4	b		b1	t1	b2	t2
DXJ30-B0	431/445	53	103	3	13	22	30	3	30	32	32.8	M35×1.5	35	40	8	26	6	31	6	31.5
DXJ30-B1(X3)	431/445	53	103	3	13	22	30	3	30	32	32.8	M35×1.5	35	40	8	26	6	31	6	31.5
DXJ35-B1(X3)	490	53	113	3	15	24	40	3	35	42	42.8	M45×1.5	45	50	10	30	6	41	6	41.5
DXJ40-B2(X4)	479/482	69	113	3	15	24	40	3	40	42	42.8	M45×1.5	45	50	12	35	6	41	6	41.5
DXJ45-B2(X4)	481	69	113	3	15	28	40	3	45	47	47.8	M50×1.5	50	65	14	39.5	8	46	8	46
DXJ55-B3(X5)	530	80	118	4	15	27	40	3	55	57	57	M60×2	60	65	16	49	8	56	8	56
DXJ65-B4(X6)	590	87	143	4	18	32	50	3	65	71	72	M75×2	75	80	18	58	10	69	10	70
DXJ70-B4(X6)	590/580	87	143	4	18	32	50	3	70	71	72	M75×2	75	80	20	62.5	10	69	10	70
DXJ80-B4(X6)	630/590	91	163	4	18	32	60	3	80	81	82	M85×2	85	90	22	71	10	79	10	80
DXJ80-X7	630/590	91	163	4	18	32	60	3	80	81	82	M85×2	85	90	22	71	10	79	10	80
DXJ80-B5(X8)	618	91	163	4	18	32	60	3	80	81	82	M85×2	85	90	22	71	10	79	10	80
DXJ90-B5(X8)	636	125	168	4	20	36	60	3	90	91	92	M95×2	95	110	25	81	12	89	12	90
DXJ100-B6(X9)	667/635	134	178	4	24	42	60	3	100	111	112	M115×2	115	25	28	90	14	109	14	110
DXJ110-B7(X10)	712	155	178	4	24	42	60	3	110	111	112	M115×2	115	125	28	100	14	109	14	110
DXJ120-B7(X10)	712	155	178	4	24	42	60	3	120	122	122	M125×2	125	140	32	109	14	119	14	120
DXJ130-B8(X11)	815	197	208	4	28	46	70	3	130	135	137	M140×2	140	50	32	119	14	132	14	135
DXJ140-B8(X11)	815	197	208	4	32	52	70	3	140	45	47	M150×2	150	60	36	128	16	142	16	144
DXJ180-B9(X12)	790	290	242	4	36	58	90	3	180	180	86	M190×3	190	200	45	165	18	180	18	182

5.5 JXD-type rack

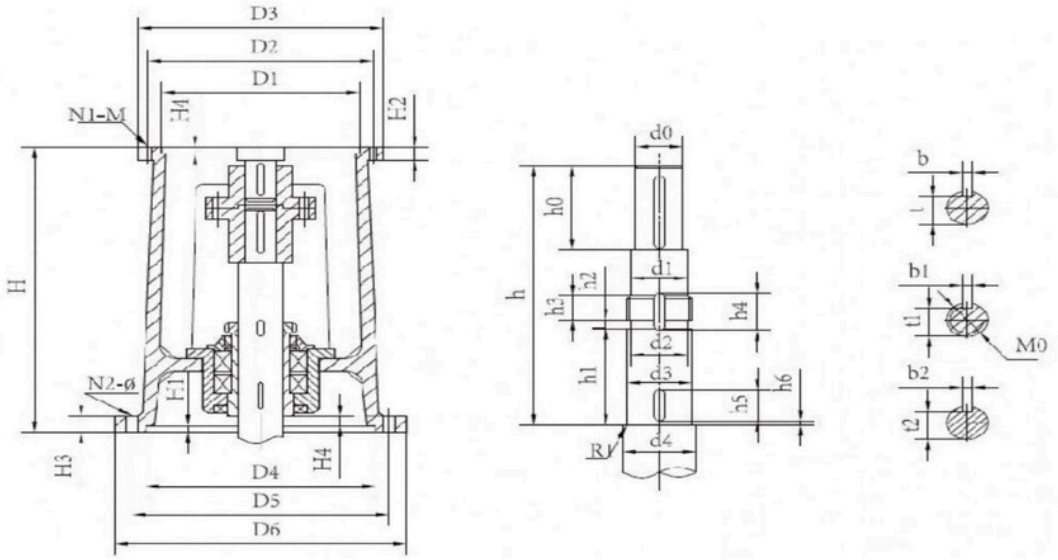

Main parameters and dimensions of JXD-type single fulcrum frame

Rack model	H	H1	H2	H3	H4	Input interface				Output interface			
						D1	D2	D3	N1-M	D4	D5	D6	n2-φ
JXD35-B1(X3)	450	6	15	24	32	170	200	230	6-M10	315	362	405	12-φ18
JXD40-B2(X4)	450	6	15	24	32	200	230	260	6-M10	315	362	405	12-φ18
JXD45-B2(X4)	450	6	15	24	22	200	230	260	6-M10	315	362	405	12-φ18
JXD55-B3(X5)	450	8	20	28	25	270	310	340	6-φ13.5	315	362	405	12-φ18
JXD70-B4(X6)	500	8	20	28	23	320(316)	360	400	8-φ15	325	390	435	12-φ18
JXD80-B4(X6)	540	8	25	30	9	320(316)	360	400	8-φ15	365	432	485	12-φ23
JXD80-X7	540	8	25	30	9	345	390	430	8-φ18	365	432	485	12-φ23
JXD90-B5(X8)	580	8	25	30	20	400	450	490	12-φ18	400	476	565	12-φ26
JXD100-B6(X9)	580	8	25	35	15	460(455)	520	580	12-φ22	400	476	565	12-φ26
JXD110-B7(X10)	650	10	30	40	15	520	590	650	12-φ22	480	540	685	12-φ26
JXD120-B7(X10)	650	10	30	40	15	520	590	650	12-φ22	480	540	685	12-φ26
JXD130-B8(X11)	800	10	45	45	20	680	800	880	12-φ38	560	635	880	20-φ27
JXD140-B8(X11)	800	10	45	45	20	680	800	880	12-φ38	560	635	880	20-φ27

Rack model	Agitator shaft end size																				
	h (B/X)	h1	h2	h3	h4	h5	h6	h0	d0	d1	d2	M0	d3	d4	R1	b	t	b1	t1	b2	t2
JXD35-B1(X3)	340	113	3	15	24	40	3	53	35	42	42.8	M45×1.5	45	50	1	10	30	6	41	6	41.5
JXD40-B2(X4)	324	113	3	15	24	40	3	69	40	42	42.8	M45×1.5	45	50	1	12	35	6	41	6	41.5
JXD45-B2(X4)	334	113	3	15	28	40	3	69	45	47	47	M50×1.5	50	65	1	14	39.5	8	46	8	46
JXD55-B3(X5)	325	118	4	15	28	40	3	80	55	57	57	M60×2	60	65	1	16	49	8	56	8	56
JXD70-B4(X6)	355	143	4	18	32	50	3	87	65	71	72	M75×2	75	80	1	18	58	10	69	10	70
JXD80-B4(X6)	363	163	4	18	32	60	3	91	80	82	82	M85×2	85	90	1.5	22	71	10	79	10	80
JXD80-X7	411	163	4	18	32	60	3	91	80	82	82	M85×2	85	90	1.5	22	71	10	79	10	80
JXD90-B5(X8)	415	168	4	20	36	60	3	125	90	92	92	M95×2	95	110	.5	25	81	12	89	12	90
IXD100-B6(X9	410/385	178	4	24	42	60	3	134	100	111	112	M115×2	115	125	2	28	90	14	109	14	109.5
JXD110-B7(X10)	431	178	4	24	42	60	3	155	110	112	112	M115×2	115	125	2	28	100	14	109	14	109.5
JXD120-B7(X10)	431	178	4	24	42	60	3	155	120	122	122	M125x2	125	140	2	32	109	14	119	14	119.5
JXD130-B8(X11)	560	208	4	28	46	70	3	197	130	135	137	M140×2	140	150	2	32	119	14	132	14	134.5
JXD140-B8(X11)	560	208	4	28	46	70	3	197	140	145	146	M150×2	150	160	2	36	128	16	142	16	144

5.6 JXLD-type rack (74 standard) (Tianjin standard)

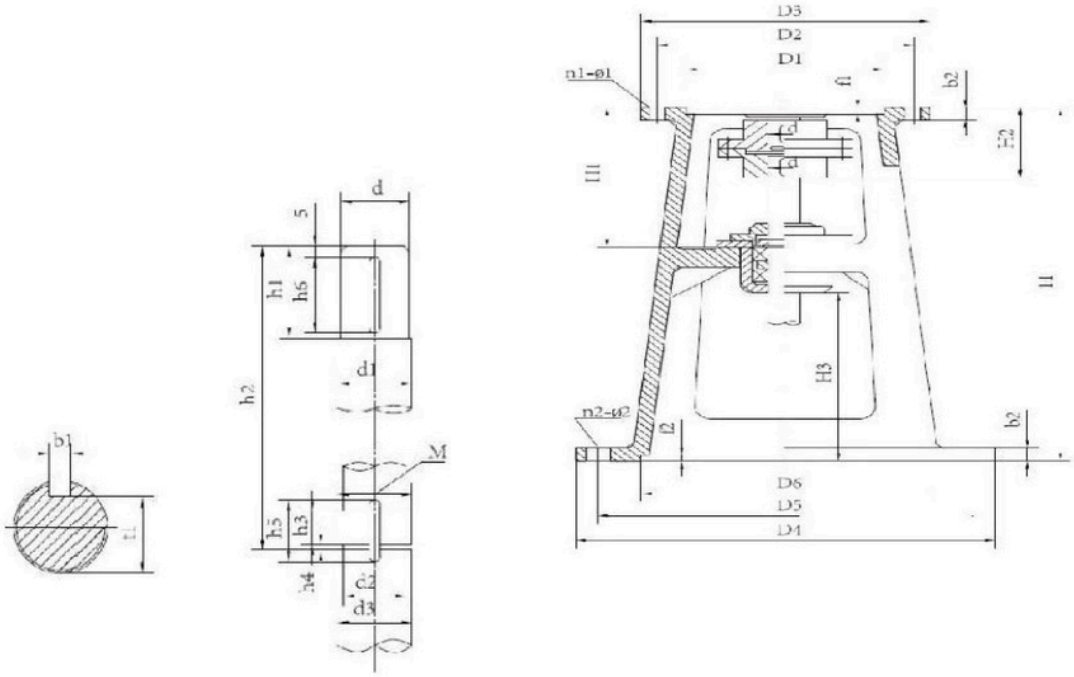

Main parameters and dimensions of JXLD-type rack (74 standard)

Rack model	d	Agitator shaft end size														Input interface size						Output interface size					H1	H2	H3	H
		d1	M	d2	d3 (k6)	h1	h2	h3	h4	h5	h6	b	t	b1	t1	D3	D2	D1	f1	b2	n1-01	D4	D5	D6 H9	f2	n2-22				
JXLD3	35	40	M45×1.5	43	45	60	215	10	3	16	50	10	30	6	41	230	200	170	4	18	6-12	410	360	300	6	6-18	291	136	170	520
JXLD4	45	50	M55×2	52	55	75	235	14	4	22	69	14	40	8	51	260	230	200	4	18	6-12	450	400	335	6	6-18	335	75	155	570
JXLD5	55	60	M65×2	62	65	75	301	14	4	22	70	16	49	8	61	340	310	270	6	22	6-13	500	450	385	6	8-18	404	178	157	650
JXLD6	65	70	M75×2	72	75	90	277	16	4	25	85	18	58	10	70	400	360	316	6	22	8-16	530	480	410	6	2-18	402	215	168	660
JXLD7	80	85	M90×2	87	90	105	316	20	4	30	100	22	71	12	84	430	390	345	6	24	8-18	565	510	430	8	2-22	441	230	194	740
JXLD8	90	95	M100×2	97	100	25	320	20	4	30	20	25	81	12	94	490	450	400	7	28	2-18	565	510	430	8	12-22	471	276	212	800
JXLD9	100	105	M110×2	107	110	125	308	20	4	31	20	28	90	14	104	580	520	455	9	30	12-22	580	520	455	10	12-22	496	313	19	810
XLD10	110	115	M120×2	117	120	55	26	24	4	35	150	28	100	14	114	550	590	520	11	30	2-22	650	590	520	10	12-22	475	363	221	830
JXLD1	130	135	M140×2	137	40	55	301	28	4	39	50	32	19	14	132	880	800	680	12	30	12-38	880	800	680	12	12-37	521	375	185	850
JXLD12	180	190	M200×2	196	200	284	377	36	4	48	280	45	165	16	190	1160	1020	900	14	45	8-39	1160	1020	900	12	8-39	757	664	235	1200

5.7 TJ-type rack

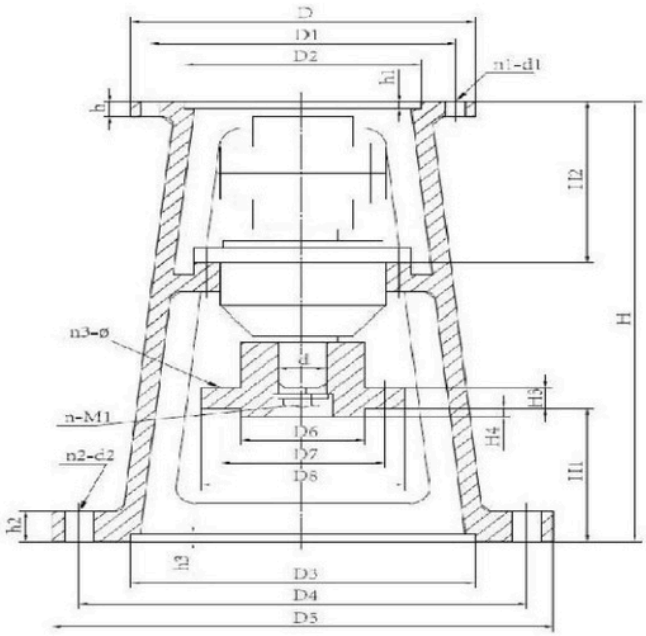

Main parameters and dimensions of TJ-type frame with JA jacketed coupling underneath

Rack model	Input interface						Output interface						H	H1	H2	H3	d	D6	D7	D8	n3-2	n-M1
	D	D1	D2	h	h1	n1-d1	D3	D4	D5	h2	h3	n2-d2										
TJ1-B1(X3)	230	200	170	20	6	6-12	220	270	305	22	7	4-24	514	201	185	15	35	60	110	140	4-13.5	1-10
TJ2-B1(X3)	230	200	170	20	6	6-12	250	300	335	22	7	4-24	517	197	190	15	35	60	110	140	4-13.5	1-10
TJ2-B2(X4)	260	230	200	20	7	6-13	250	300	335	25	7	4-24	530	176	210	20	45	85	120	160	4-13.5	1-12
TJ3-B2(X4)	260	230	200	20	7	6-13	295	350	392	26	7	4-26	560	206	210	20	45	85	120	160	4-13.5	1-12
TJ3-B3(X5)	340	310	270	20	7	6-13	295	350	392	26	7	4-26	560	191	210	20	45	85	120	160	4-13.5	1-12
TJ4-B3(X5)	340	310	270	20	7	6-13	345	400	442	26	7	4-26	635	245	215	22	55	100	150	180	4-18	1-16
TJ5-B3(X5)	340	310	270	22	7	6-13	390	450	498	26	7	4-30	635	250	215	22	55	100	150	180	4-18	1-16
TJ6-B4(X6)	400	360	320316	22	7	8-16	435	500	548	30	7	8-30	736	276	250	28	70	110	165	200	4-18	1-16
TJ7-B5(X8)	490	450	400	26	10	12-18	440	550	600	30	10	12-22	805	241	296	36	90	150	190	230	6-18	1-16
TJ8-B6(X9)	580	520	460(455)	28	10	12-22	500	550	600	32	10	12-22	820	192	362	36	100	140	200	240	6-18	1-16
TJ9-B7(X10)	650	590	520	30	12	12-22	560	650	700	35	10	12-27	1100	355	455	36	110	150	250	290	6-27	1-16
TJ10-B8(X11)	880	800	680	45	12	12-38	720	810	880	45	10	20-27	1200	304	550	40	130	180	290	350	6-27	1-16

Note: TJ6 and TJ7 can be equipped with XL7 reducer. Please specify when ordering.

5.8 TJQ-type rack

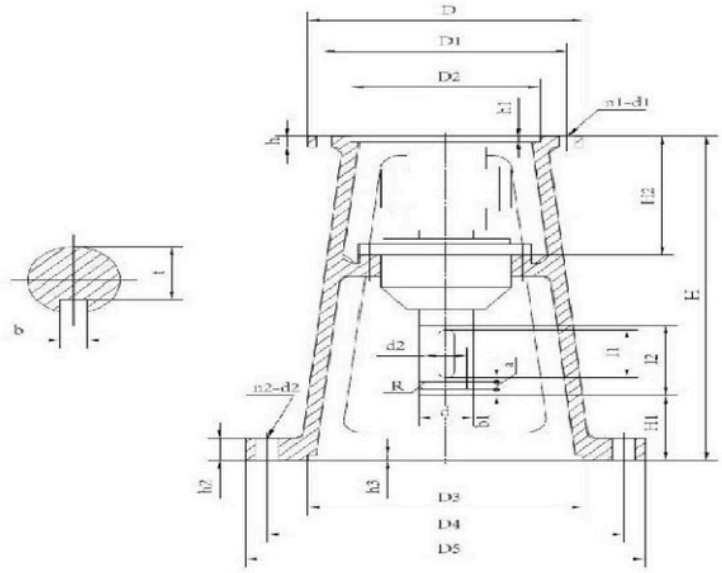

Main parameters and dimensions of TJQ-type frame with JQ jacketed coupling underneath

Rack model	d (h7)	Input interface						Output interface						H	H1	H2	11	I2	a (H11)	b1	d2 (h11)	b	t	Coupling Shaft model
		D	D1	D2	h	h1	n1-d1	D3	D4	D5	h2	h3	n2-d2											
TJQ1-B1(X3)	35	230	200	170	18	5	6-12	220	270	305	22	7	4-24	514	173	185	55	85	5	4	30	10	30	JQ35
TQ2-B1(X3)	35	230	200	170	20	6	6-13.5	250	300	335	22	7	4-24	517	182	190	55	85	5	4	30	10	30	JQ35
TJQ2-B2(X4)	45	260	230	200	20	6	6-13.5	250	300	335	22	7	4-24	530	175	210	70	100	6	5	37	14	39.5	JQ45
TJQ3-B2(X4)	45	260	230	200	20	6	6-13.5	295	350	392	25	7	4-26	560	191	210	70	100	6	5	37	14	39.5	JQ45
TJQ3-B3(X5)	45	340	310	270	20	6	6-13.5	295	350	392	26	7	4-26	560	191	210	70	100	6	5	37	14	39.5	JQ45
TJQ4-B3(X5)	55	340	310	270	20	6	6-13.5	345	400	442	26	7	4-26	635	253	210	70	100	6	5	47	16	49	JQ55
TJQ5-B3(X5)	55	340	310	270	20	6	6-13.5	390	450	498	26	7	4-30	635	258	215	70	100	6	5	47	16	49	JQ55
TJQ6-B4(X6)	70	400	360	320(316)	22	6	8-16	435	500	548	26	7	8-30	736	284	250	100	130	8	6	60	20	62.5	JQ70
TJQ7-B5(X8)	90	490	450	400	25	7	12-18	440	550	600	28	10	12-22	805	233	296	140	170	10	8	80	25	81	JQ90
TJQ8-B6(X9)	100	580	520	460(455)	26	10	12-22	500	550	600	30	10	12-22	820	187	362	140	170	10	8	90	28	90	JQ100
TJQ9-B7(X10)	110	650	590	520	30	12	12-22	560	650	700	40	10	12-27	1100	210	455	160	200	12	10	100	28	100	Q110
TQ10-B8(X11)	130	880	800	680	40	12	12-38	720	810	880	45	10	20-27	1200	297	550	180	225	14	12	118	32	119	JQ120

5.9 TJA-type (new standard)rack

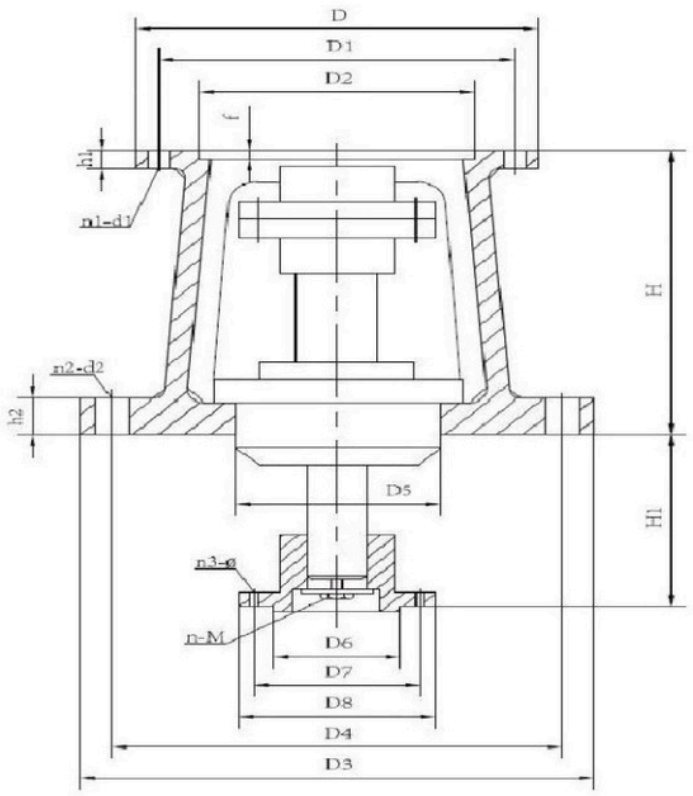

Main parameters and dimensions of TJA-type (new standard)rack

Rack model	Reducer model	Input interface						Output interface				H	H1	D5	D6	D7	D8	n3-Φ	n-A
		D	D1	D2	h1	f	n1-d1	D3	D4	h2	n2-d2								
TJA1	B1(X3)	230	200	170	16	5	6-12	270	235	17	4-12	215	115	115	60	110	140	4-12	1-10
TJA2	B2(X4)	260	230	200	20	6	6-12	310	270	20	4-18	240	135	115	85	120	160	4-13	1-12
TJA3	B3(X5)	340	310	270	22	6	6-14	370	320	22	4-20	290	162	160	100	150	180	4-18	1-12
TJA4	B4(X6)	400	360	320(316)	22	7	8-16	455	400	24	6-20	315	185	160	110	165	200	4-18	1-16
TJA5	B5(X8)	490	450	400	25	7	12-18	545	495	26	8-22	332	230	240	150	190	230	6-18	1-20
TJA6	B6(X9)	580	520	460(455)	25	10	12-22	600	550	35	12-22	400	210	245	140	200	240	6-18	1-20
TJA7	B7(X10)	650	590	520	25	11	12-22	680	620	35	12-22	450	240	270	150	250	290	6-27	1-20

5.10 JAI large flange frame (69 standard) and JAII special rack for glass-lined reaction tank (69 standard)

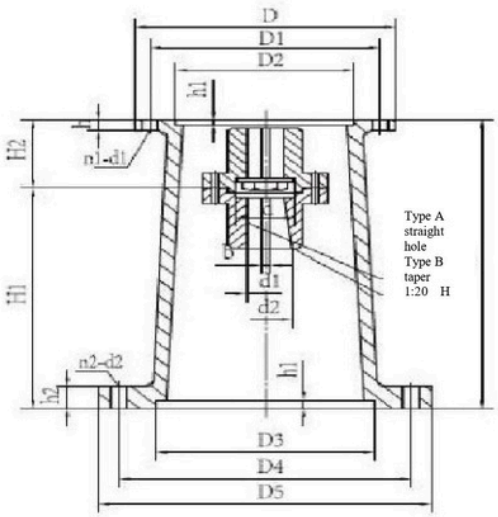

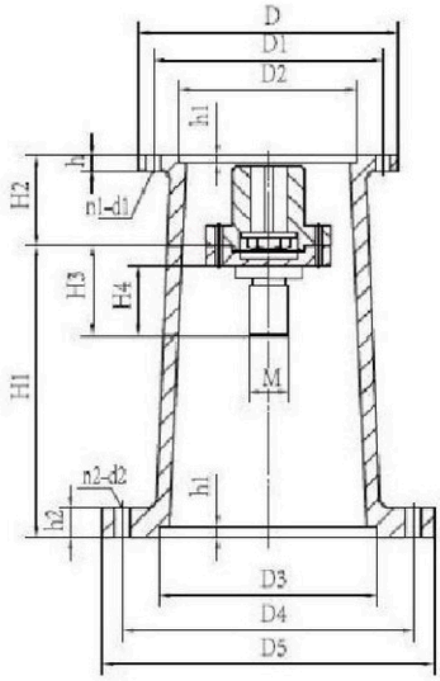

Main parameters and dimensions of JAI-type unpivoted rack (69 standard)

Rack mode l	Reducer model	Input interface						Output interface					H1	H2	H3	H4	d	A-type straight hole		B-type tapered hole 1:20	
		D	D1	D2	h	h1	n1-d1	D3	D4	D5	h2	n2-d2						d1	b	d2	b
JAl0	B0(X2)	90(180)	160	40(130)	16	5	4-12(6-M10)	165	210	250	16	6-12	205	55	55	18	45	30(25)	8		
JAl1	B1(X3)	230	200	170	16	5	6-12	215	260	290	16	8-12	226	84	75	25	50	35	10	35	10
JAl2	B2(X4)	260	230	200	20	6	6-12	290	350	380	20	8-14	250	96	90	30	70	45	14	50	14
JAl3	B3(X5)	340	310	270	22	6	6-13.5	360	440	480	22	8-18	300	112	110	30	80	55	16	60	16
JAl4	B4(X6)	400	360	320(316)	22	7	8-15	440	530	580	25	8-22	384	141	130	40	90	70(65)	20	70	20
JAl5	B50X8	490	450	400	25	7	12-18	450	550	600	28	8-22	390	160	150	40	115	90	25	85	25

Note: This frame is equipped with rigid coupling, and the upper coupling is JA-type straight hole. While the lower coupling is JA-type straight hole or B-type tapered hole with taper of 1:20. The frame is unsupported and is used when the axial forces from the reactor are not significant.

Main parameters and dimensions of JAll (69 standard) unsupported rack with threaded coupling

Rack model	Reducer Model	Input interface						Output interface					H1	H2	H3	H4	M	Volume of reaction tank (L)
		D	D1	D2	h	h1	n1-d1	D3	D4	D5	h2	n2-d2						
JAll1	B1(X3)	230	200	170	16	5	6-12	215	260	290	16	8-12	226	84	93	50	M33X2	50-100
															120	60	M42×3	200
JAII2	B2(X4)	260	230	200	20	6	6-12	230	300	345	20	4-18	254	96	120	60	M42×3	200-300
																	M48×3	500
JAII3	B3(X5)	340	310	270	22	6	6-13.5	320	400	460	22	4-20	328	112	120	80	M60×4	1000
																	M68×4	1500
																	M78×4	2000
JAII4	B4(X6)	400	360	320316)	22	7	8-15	440	530	580	25	8-22	384	141	130	80	M78×4	3000
JA//5	B5(X8)	490	450	400	25	7	12-18	450	550	600	28	8-22	390	160	130	80	M78×4	5000

Note: JA4 can be equipped with XL7 reducer. Please specify when ordering.