Lighting: LED Tank Light, DHTK Series

Flameproof/ Increased Safety and Dust protection by enclosure

Zone 1 & 2 – 21 & 22

Application

The DHTK tank light design used where flammable vapors and gases are present, along with harsh conditions including vibration, dust, moisture, corrosive atmospheres.

Specification

Body material : Marine grade copper-free aluminium alloy with polyester powder coated, RAL 7032 (grey)
Lens : Heat and impact resistant glass
Mounting : Hot-dip gavanized steel

LED System

Luminous efficient : 100 lm/W
Colour temperature : 5700 K (cool white)
Color Rendering Index (Ra) : >70 (standard)
>80 (optional)
Chip : CREE
Beam angle : Average 25°

Option

LED colour: Red, Green or Yellow
Body : Offshore painting (Acrylic polyurethane coating)
Mounting, Bolts : Stainless steel, SUS 316

Technical Data

Hazardous Area	Gas	Dust
Zones	1 & 2	21 & 22
Equipment Group/Category	II 2G	II 2D
Symbol of Protection	Ex db eb IIC T6 Gb	Ex tb IIIC T80°C Db IP66
Conformity to standards	EN IEC 60079-0:2018, EN 60079-1:2014, EN 60079-7:2015, EN 60079-31:2014	
Ambient Temperature	-20°C to +55°C	
Index of Protection	IP66	

Entries	1-hole standard (M25x1.5 or Ø3/4" NPT), 2-holes are optional
Mounting	Ceiling or Bracket mounting
Connection	L, N and E ; for 1-4mm.² cable (Through wiring system with an extra terminal block for cable connection at both ends.)
Rated Voltage	24V.dc or 110-240V.ac 50/60Hz., THDi < 20%, P.F. ≥ 0.95

Catalogue Number Logic

DHTK - ■■ ■■■ - □ - □□ - ⬡

Series	LED Power	Voltage		Mounting		Entries		Option	
	(see ordering requirement table below)	22A	110-240V.ac 50/60Hz.	C	Ceiling	M2	M25x1.5	none	Coolwhite (standard)
		24D	24V.dc	B	Bracket	N2	Ø3/4" NPT	R	Red light
								G	Green light
								Y	Yellow light

Luminous Intensity Distribution Curve

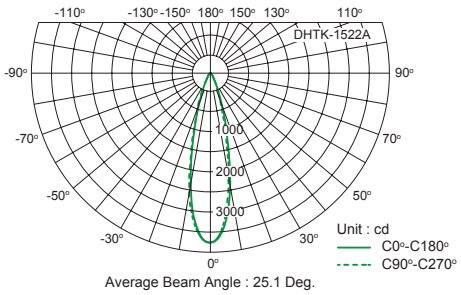

Average Beam Angle : 25.1 Deg.

Ordering Requirements

Cat. No.	LED Power	Voltage	Temp. Class (for zone 1 & 2)		Max. Surface Temp.* (for zone 21 & 22)		Approx. Weight (kgs.)
			Ta 40°C	Ta 55°C	Ta 40°C	Ta 55°C	
DHTK-1022A-□-□-⬡	10W.	110-240V.ac 50/60Hz.	T6	T6	T80°C	T80°C	3.13
DHTK-1522A-□-□-⬡	15W.						
DHTK-1024D-□-□-⬡	10W.	24V.dc	T6	T6	T80°C	T80°C	3.13
DHTK-1524D-□-□-⬡	15W.						

Remark * : *The maximum surface temperatures are specified for dust free condition. The dust layer which may cover around the lighting fixture will cause to higher surface temperature.*

Dimension

Ceiling mount

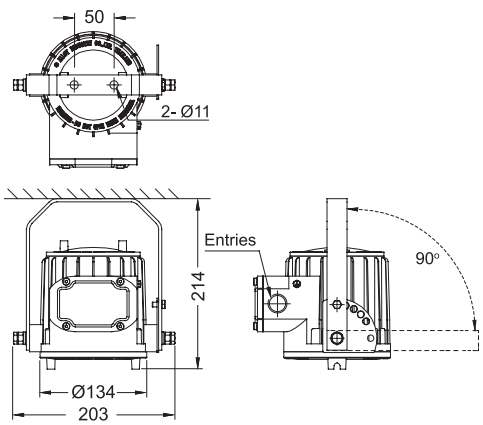

Bracket mount

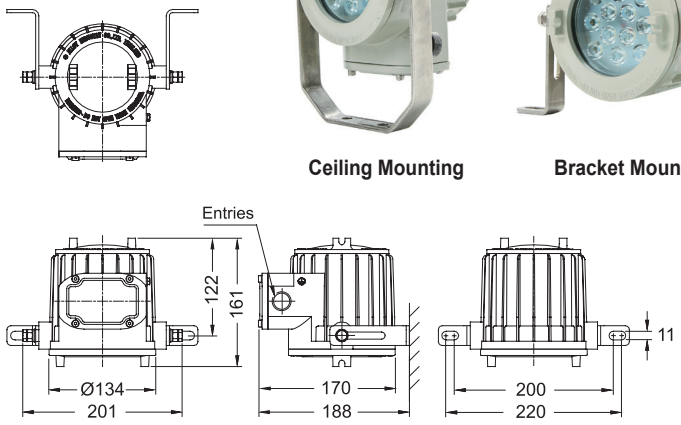

Ceiling Mounting

Bracket Mounting

Alloy Industry Co., Ltd.
Visit our website at www.alloyindustry.com
or contact us at +66 (0) 2434 3688 © January 2022